US009094611B2

(12) **United States Patent**
Kennedy et al.

(10) **Patent No.: US 9,094,611 B2**
(45) **Date of Patent: Jul. 28, 2015**

(54) **LOCATION-TAG CAMERA FOCUSING SYSTEMS**

(71) Applicant: **Free Focus Systems LLC**, Scottsdale, AZ (US)

(72) Inventors: **Douglas R Kennedy**, Scottsdale, AZ (US); **Stephen A Kennedy**, Scottsdale, AZ (US); **Phillip B Kennedy**, Phoenix, AZ (US)

(73) Assignee: **Free Focus Systems LLC**, Scottsdale, AZ (US)

(*) Notice: Subject to any disclaimer, the term of this patent is extended or adjusted under 35 U.S.C. 154(b) by 0 days.

(21) Appl. No.: **14/543,584**

(22) Filed: **Nov. 17, 2014**

(65) **Prior Publication Data**

US 2015/0138427 A1 May 21, 2015

Related U.S. Application Data

(63) Continuation of application No. 14/541,621, filed on Nov. 14, 2014.

(60) Provisional application No. 61/904,968, filed on Nov. 15, 2013, provisional application No. 61/921,337, filed on Dec. 27, 2013.

(51) **Int. Cl.**

H04N 5/232	(2006.01)
G01S 5/02	(2010.01)
G01S 19/46	(2010.01)

(52) **U.S. Cl.**

CPC ***H04N 5/23296*** (2013.01); ***G01S 5/0263*** (2013.01); ***G01S 19/46*** (2013.01); ***H04N 5/23216*** (2013.01); ***H04N 5/23293*** (2013.01)

(58) **Field of Classification Search**

None

See application file for complete search history.

(56) **References Cited**

U.S. PATENT DOCUMENTS

5,315,340	A *	5/1994	Hirasawa	396/81
5,361,115	A *	11/1994	Ohtsuka et al.	396/58
5,995,763	A *	11/1999	Posa et al.	396/57
7,388,496	B1	6/2008	Halcrow	
7,561,786	B1	7/2009	Black	
8,162,486	B2	4/2012	Borger	
8,310,652	B2	11/2012	Kanayama	
8,334,775	B2	12/2012	Tapp	
2004/0046938	A1 *	3/2004	Gero	352/140
2005/0007553	A1 *	1/2005	Romanoff et al.	352/243

(Continued)

FOREIGN PATENT DOCUMENTS

JP 2007058680 8/2007

OTHER PUBLICATIONS

Bauer, "Easy Focus, First AC's Best Friend," retrieved from http://moviecam-easyfocus.com/pdf/easyfocus_folder_hr.pdf , dated Mar. 28, 2013.*

(Continued)

Primary Examiner — Dennis Hogue

(74) *Attorney, Agent, or Firm* — Spencer Fane Britt Browne LLP

(57) **ABSTRACT**

A system for improved camera focusing systems using subject location tags. More particularly, the disclosed subject matter relates to providing a system comprising camera accessories and in-lens technologies that allows for the continuous, automated focus of a subject by measuring the distance between the camera and a subject that has been "tagged" with a locator beacon.

29 Claims, 12 Drawing Sheets

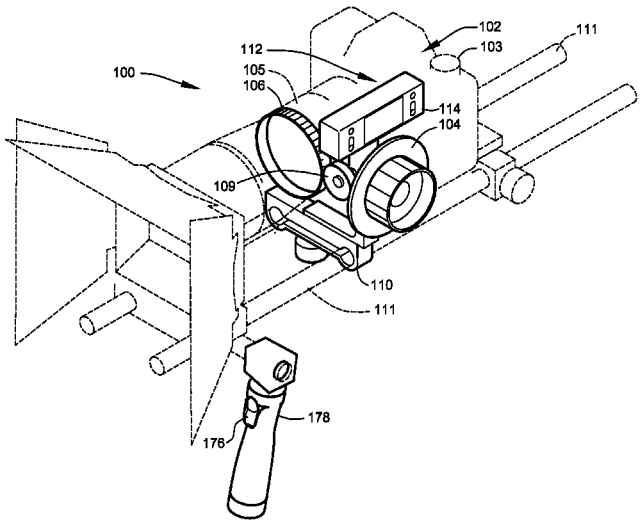

(56) **References Cited**

U.S. PATENT DOCUMENTS

2005/0011959	A1	1/2005	Grosvenor	
2006/0050929	A1	3/2006	Rast	
2006/0171705	A1*	8/2006	Slupe et al.	396/427
2006/0197840	A1*	9/2006	Neal et al.	348/169
2007/0096909	A1	5/2007	Lally	
2007/0133979	A1*	6/2007	Lackey et al.	396/428
2008/0002031	A1*	1/2008	Cana et al.	348/208.14
2008/0088703	A1*	4/2008	Dollahite	348/169
2008/0225137	A1*	9/2008	Kubo et al.	348/231.2
2008/0225234	A1*	9/2008	Bauer et al.	352/140
2009/0322489	A1	12/2009	Jones	
2010/0007738	A1	1/2010	Lehnert	
2010/0097221	A1	4/2010	Kreiner	
2012/0019702	A1*	1/2012	Richter	348/333.02
2012/0195574	A1*	8/2012	Wallace	386/278
2012/0300079	A1	11/2012	Hale	
2012/0313759	A1	12/2012	Markwitz	
2013/0228620	A1	9/2013	Ahern	
2013/0229528	A1*	9/2013	Taylor et al.	348/169
2014/0340487	A1*	11/2014	Gilliland et al.	348/48

OTHER PUBLICATIONS

PCT/US2014/065827 International Search Report dated Feb. 19, 2015, 15 pgs.

* cited by examiner

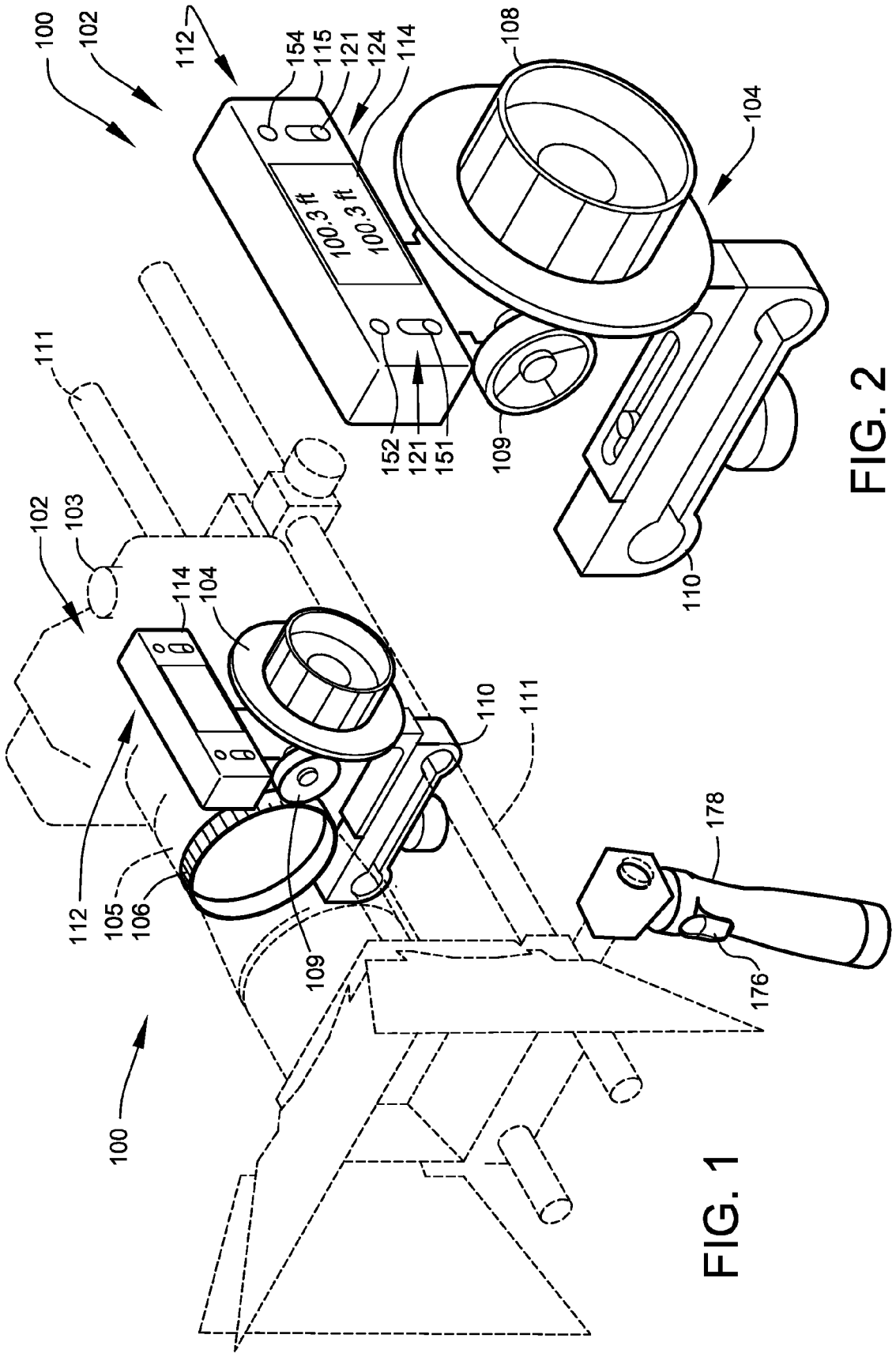
100
102
112
154
115
121
124
114
108
104
100.3 ft
100.3 ft
111
152
121
151
109
110
102
103
114
104
110
111
112
105
106
109
178
176
100

FIG. 2

FIG. 1

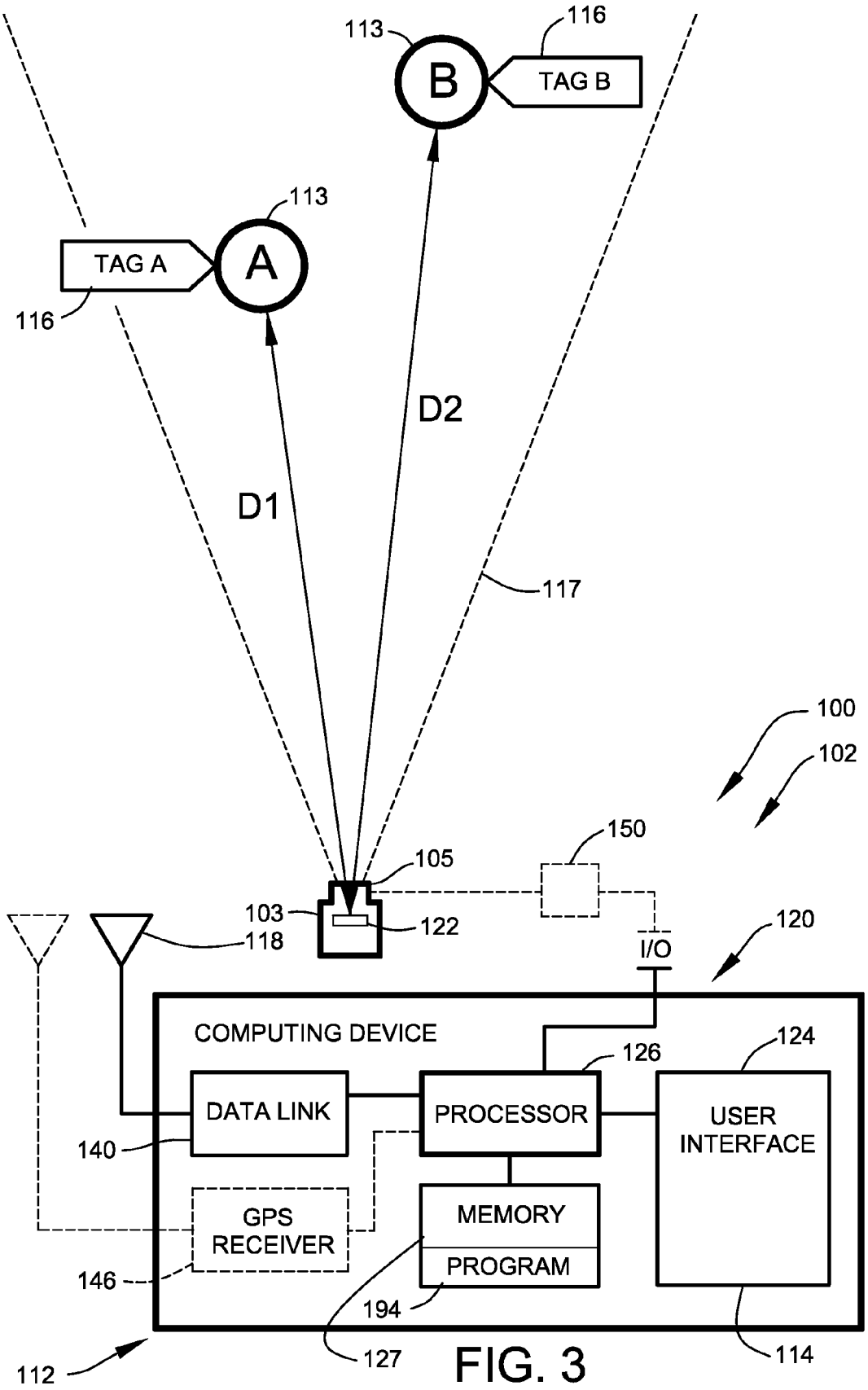
113
116
B
TAG B
113
TAG A
A
116
D2
D1
117
100
102
150
105
103
122
118
120
I/O
COMPUTING DEVICE
126
124
DATA LINK
PROCESSOR
USER INTERFACE
140
GPS RECEIVER
MEMORY
PROGRAM
146
194
127
114
112

FIG. 3

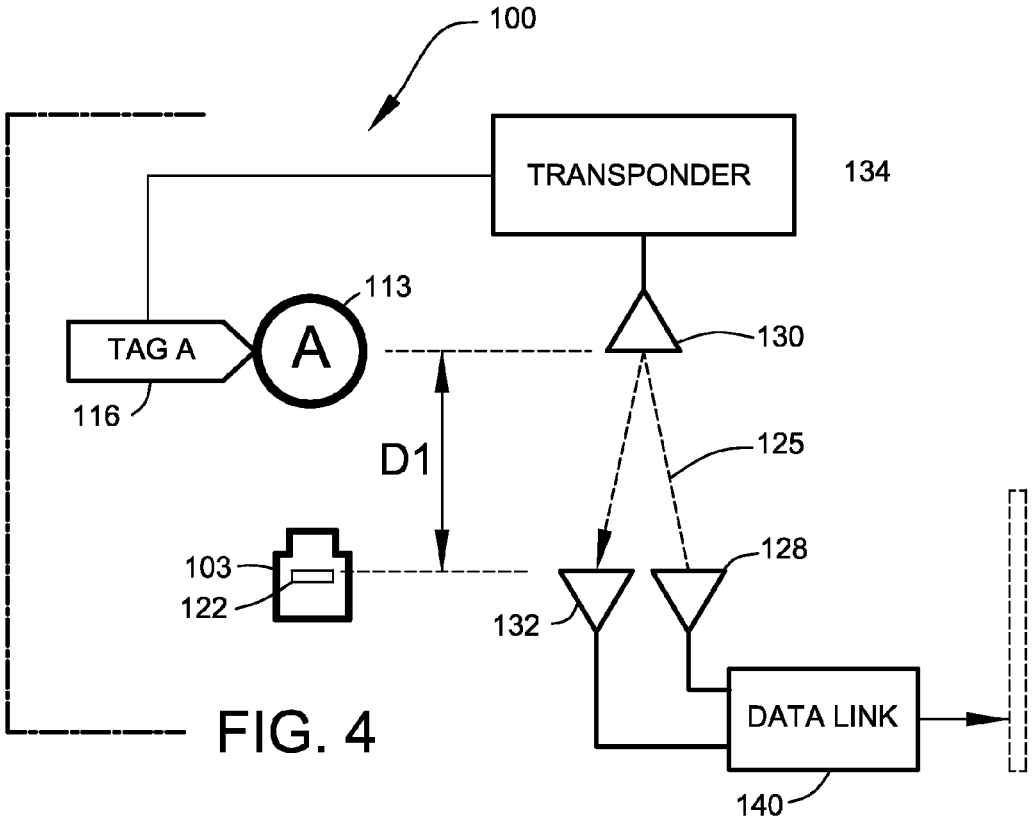
100
TRANSPONDER
134
113
TAG A
A
130
116
D1
125
103
122
128
132
DATA LINK
140

FIG. 4

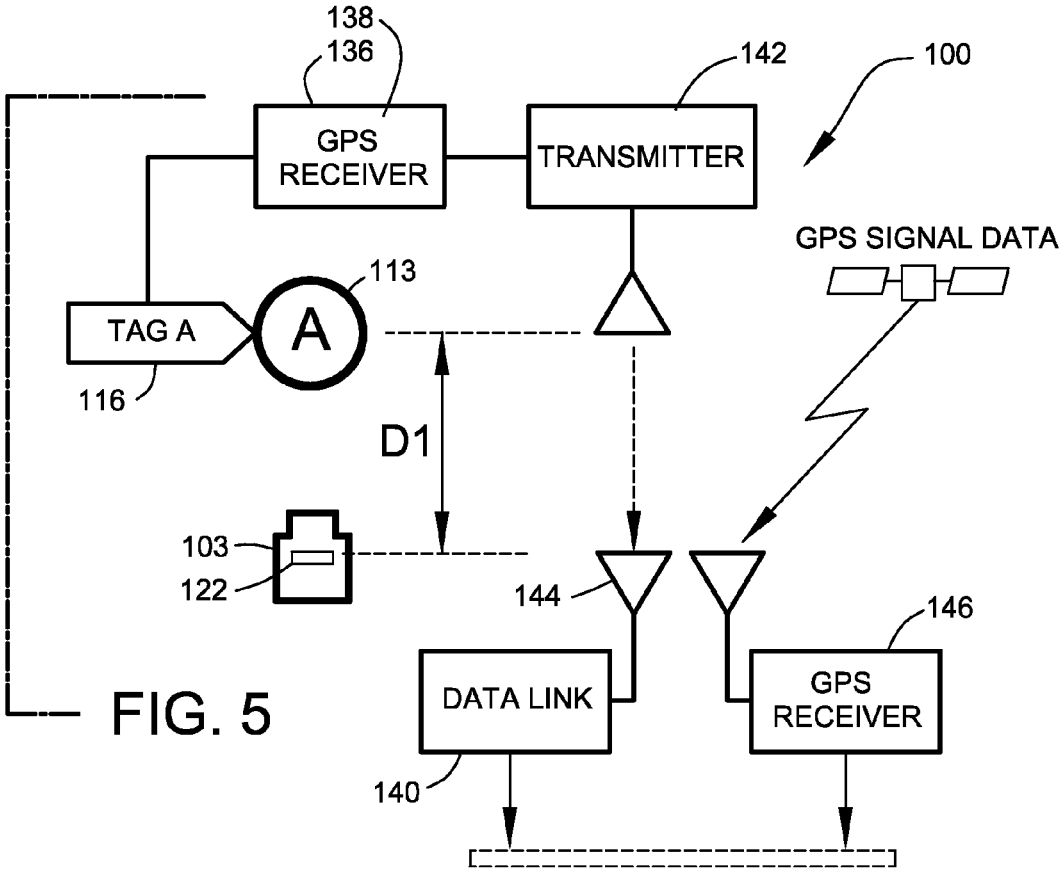
138
136
142
100
GPS
RECEIVER
TRANSMITTER
GPS SIGNAL DATA
113
TAG A
A
116
D1
103
122
144
146
DATA LINK
GPS
RECEIVER
140

FIG. 5

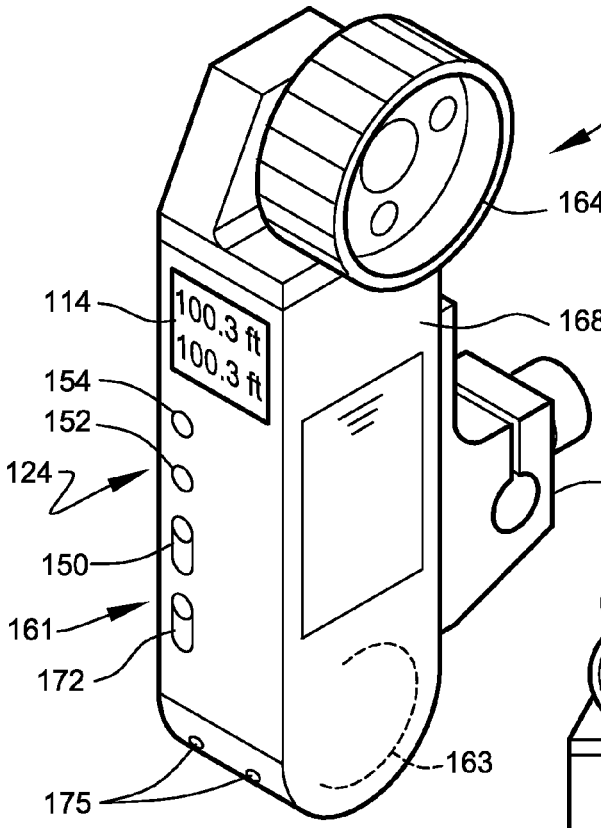

FIG. 6

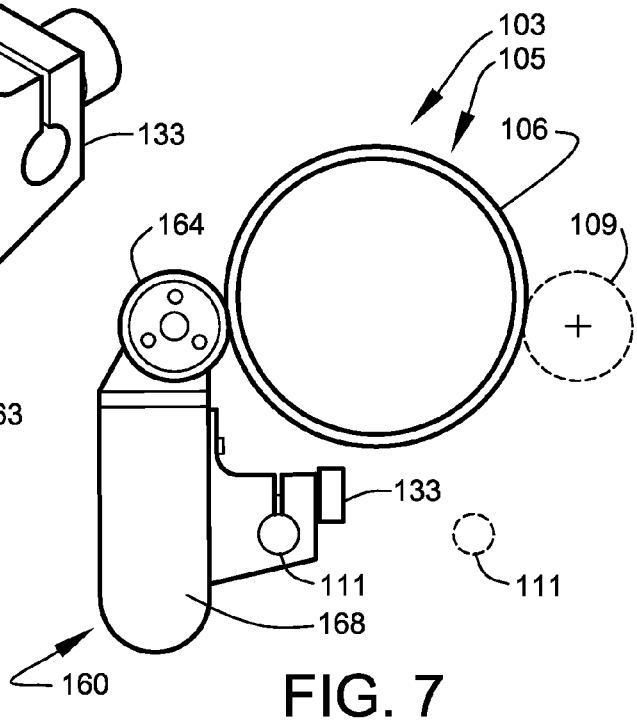

FIG. 7

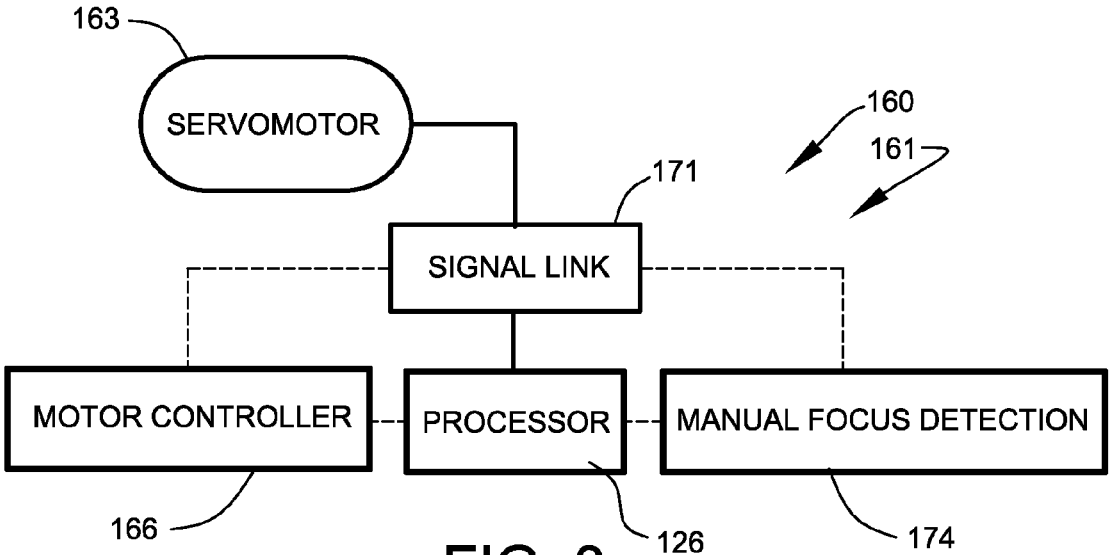

FIG. 8

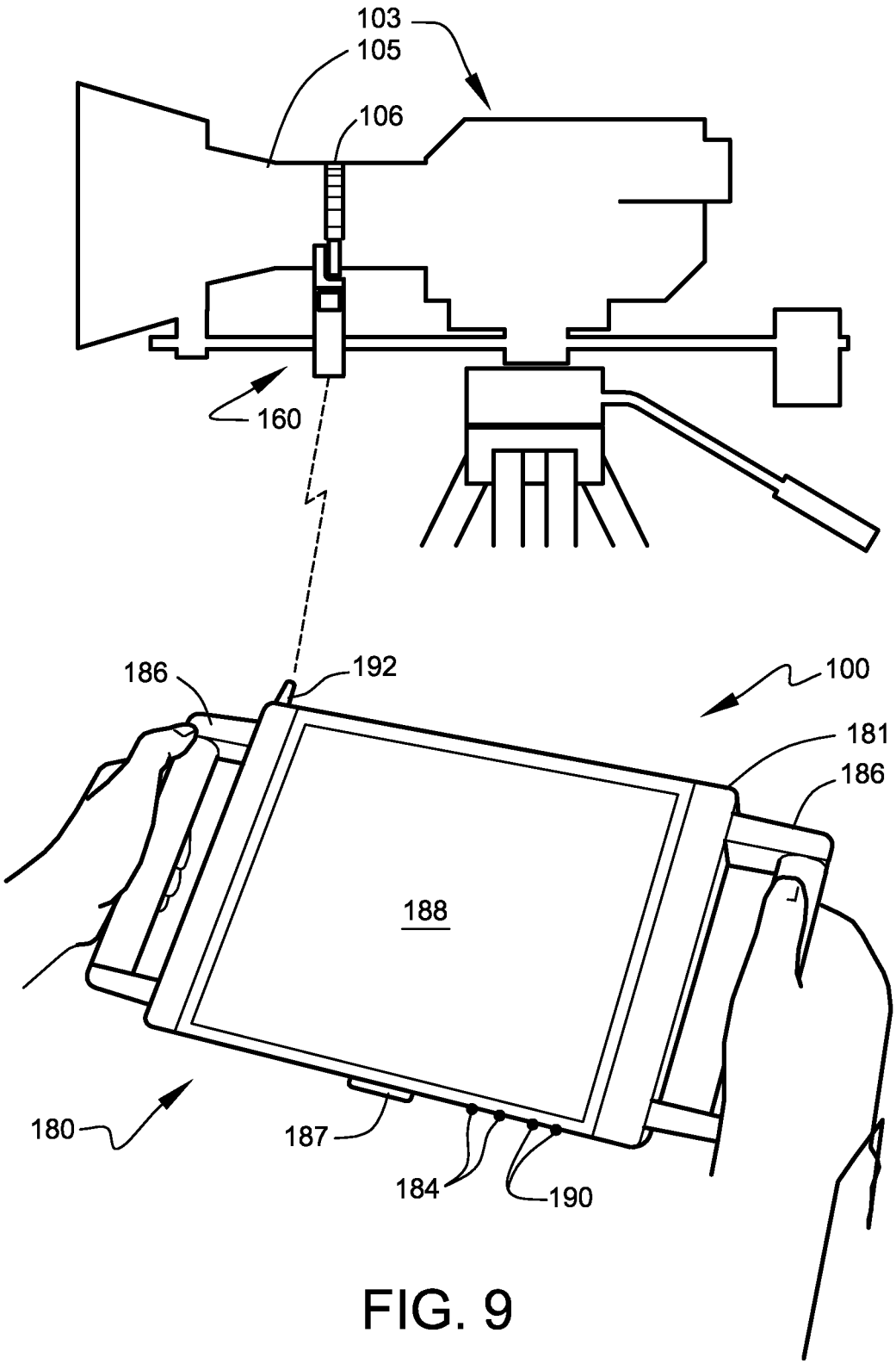

FIG. 9

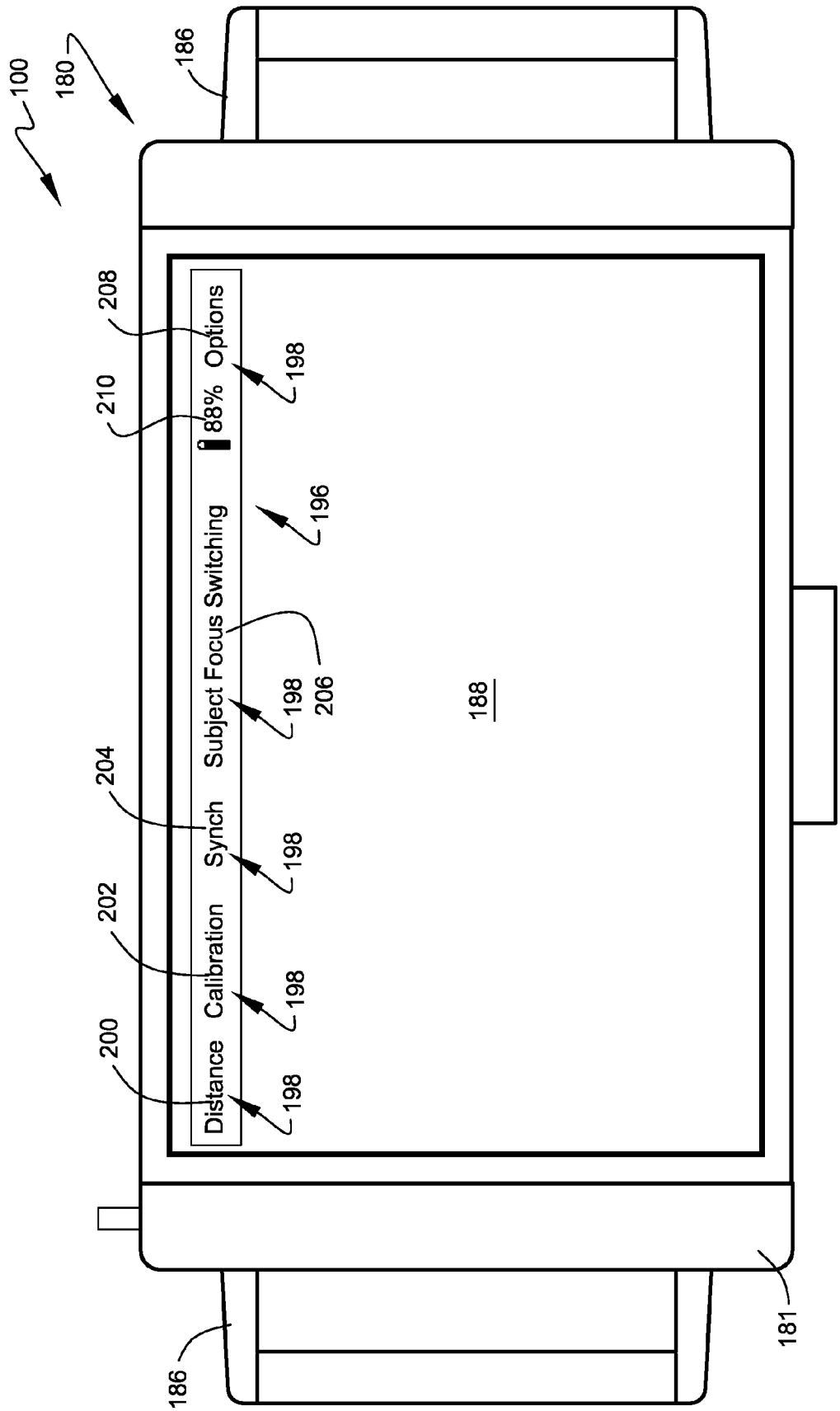
100
180
186
208
Options
198
210
88%
196
Switching
Focus
206
Subject
198
188
204
Synch
198
202
Calibration
198
200
Distance
198
181
186

FIG. 10

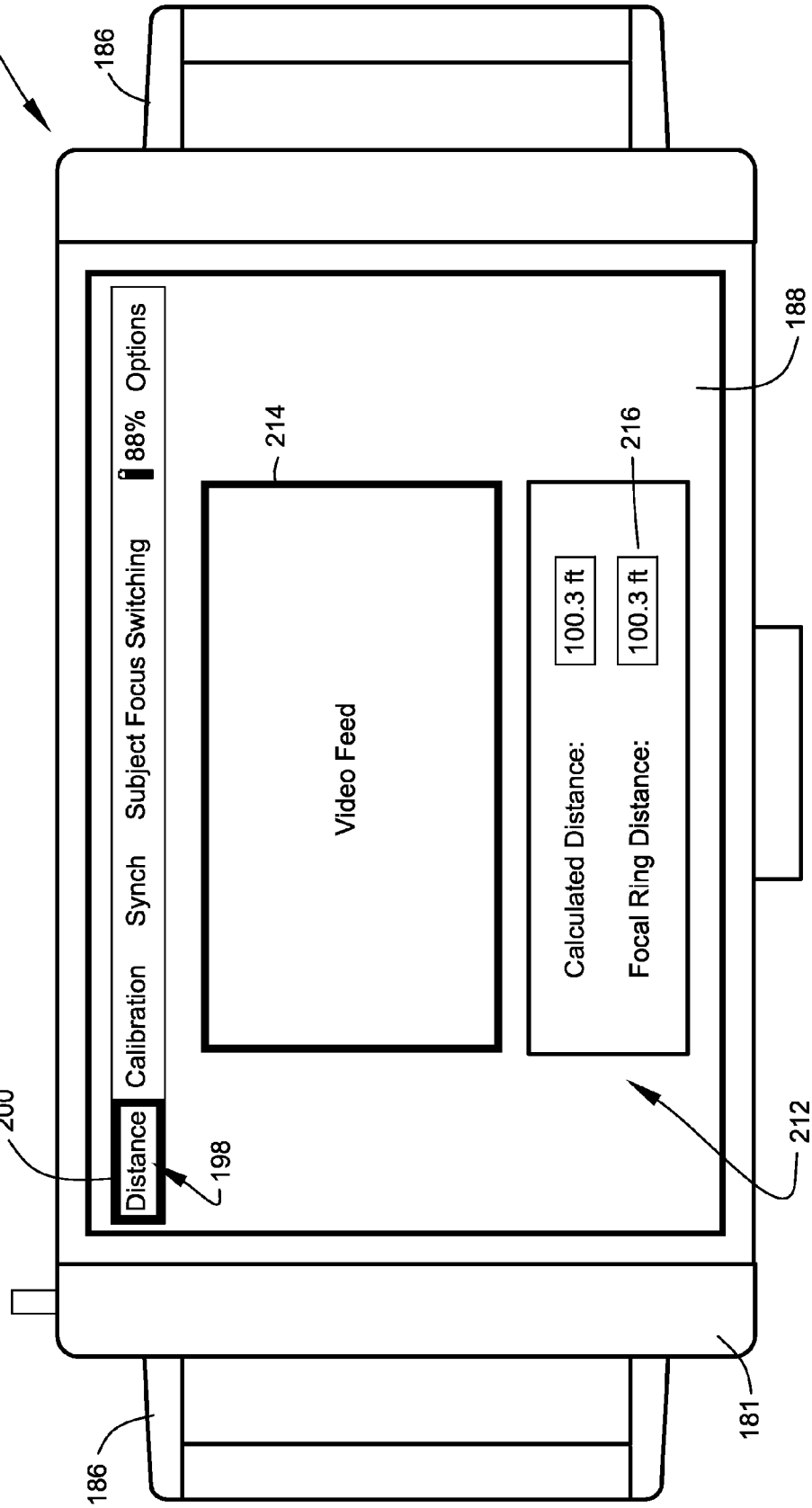
100
180
186
188
214
216
Video Feed
Calculated Distance:
100.3 ft
Focal Ring Distance:
100.3 ft
Distance
Calibration
Synch
Subject Focus Switching
88%
Options
200
198
212
181
186

FIG. 11

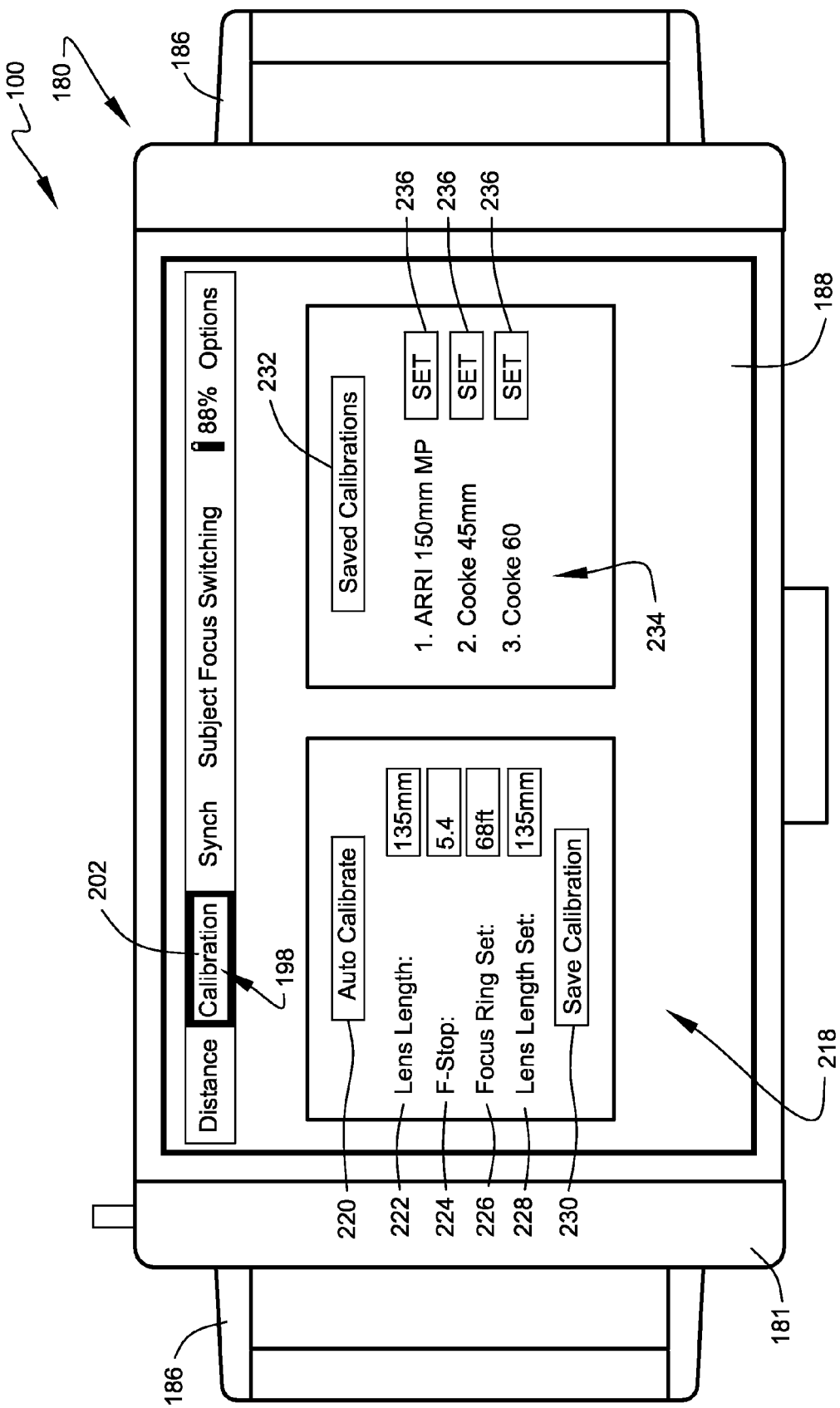
100
180
186
236
236
236
188
Distance
Calibration
Synch
Subject Focus Switching
88%
Options
202
198
232
Saved Calibrations
SET
SET
SET
1. ARRI 150mm MP
2. Cooke 45mm
3. Cooke 60
234
Auto Calibrate
135mm
5.4
68ft
135mm
Lens Length:
F-Stop:
Focus Ring Set:
Lens Length Set:
Save Calibration
218
220
222
224
226
228
230
181
186

FIG. 12

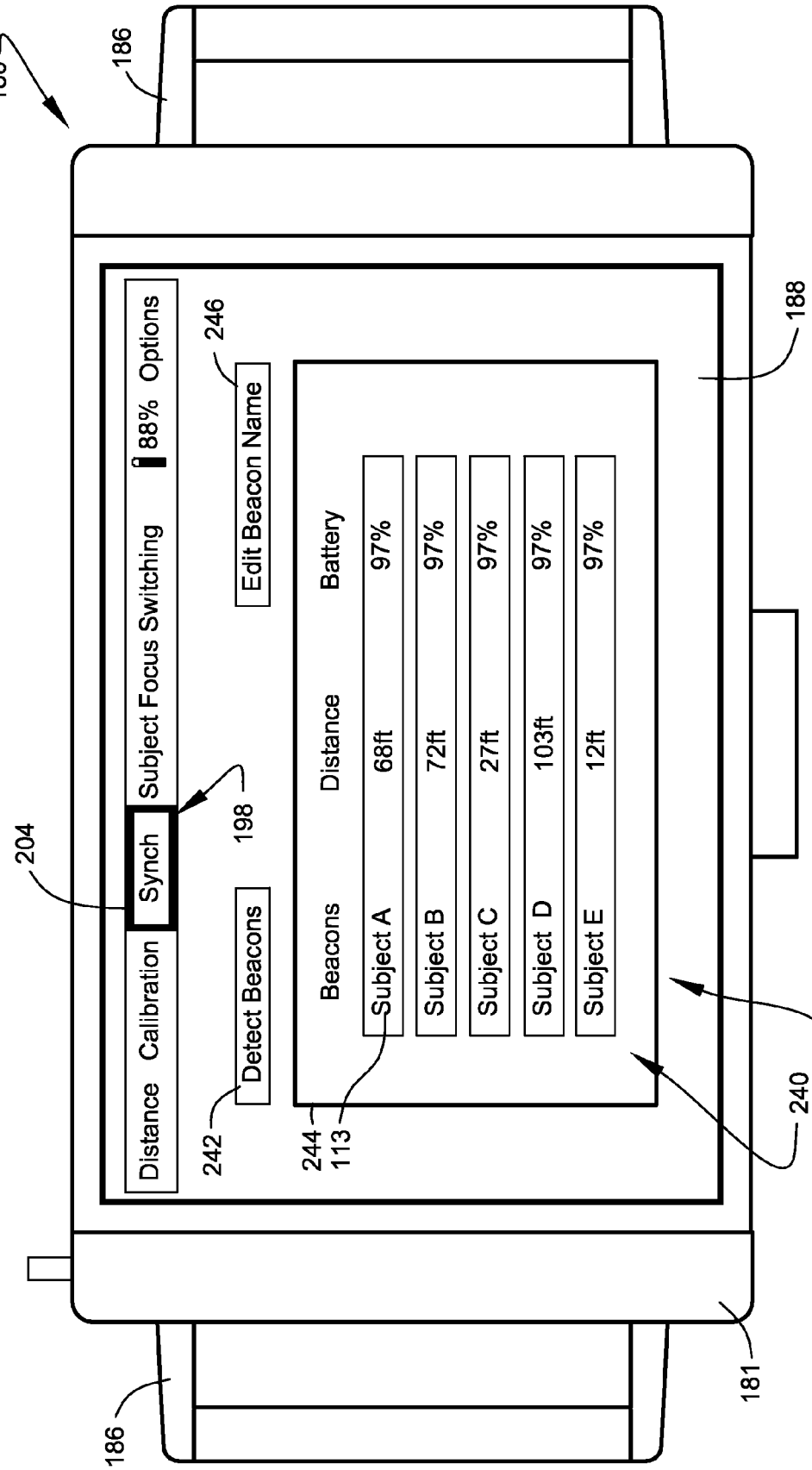
100
180
186
188
246
Edit Beacon Name
Distance Calibration Synch Subject Focus Switching 88% Options
198
204
Detect Beacons
242
Beacons Distance Battery
Subject A 68ft 97%
Subject B 72ft 97%
Subject C 27ft 97%
Subject D 103ft 97%
Subject E 12ft 97%
244
113
240
205
181
186

FIG. 13

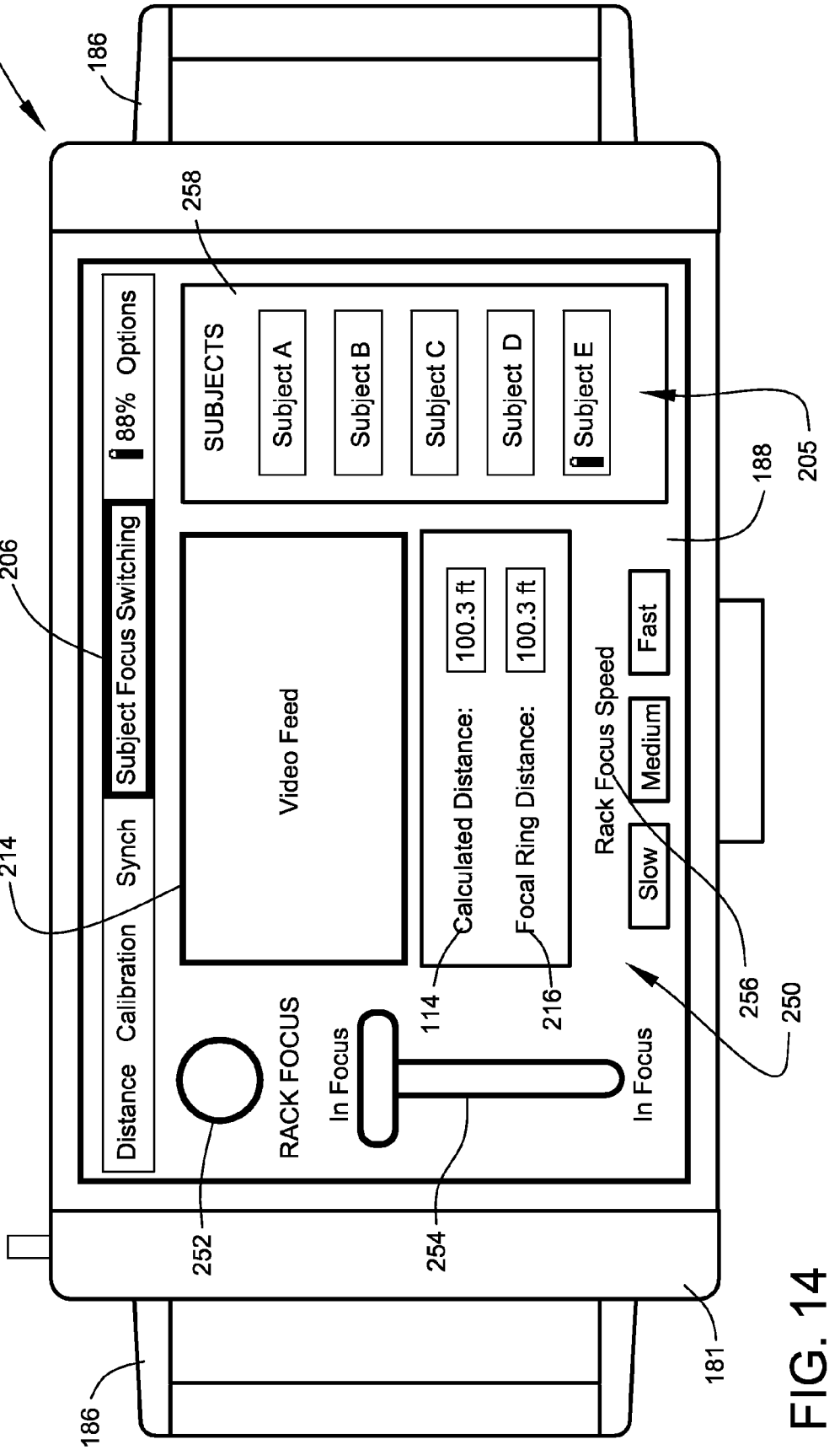
100
180
186
258
SUBJECTS
Subject A
Subject B
Subject C
Subject D
Subject E
88% Options
Subject Focus Switching
Synch
Calibration
Distance
Video Feed
Calculated Distance:
100.3 ft
Focal Ring Distance:
100.3 ft
Rack Focus Speed
Fast
Medium
Slow
RACK FOCUS
In Focus
In Focus
206
214
205
188
114
216
256
250
252
254
181
186

FIG. 14

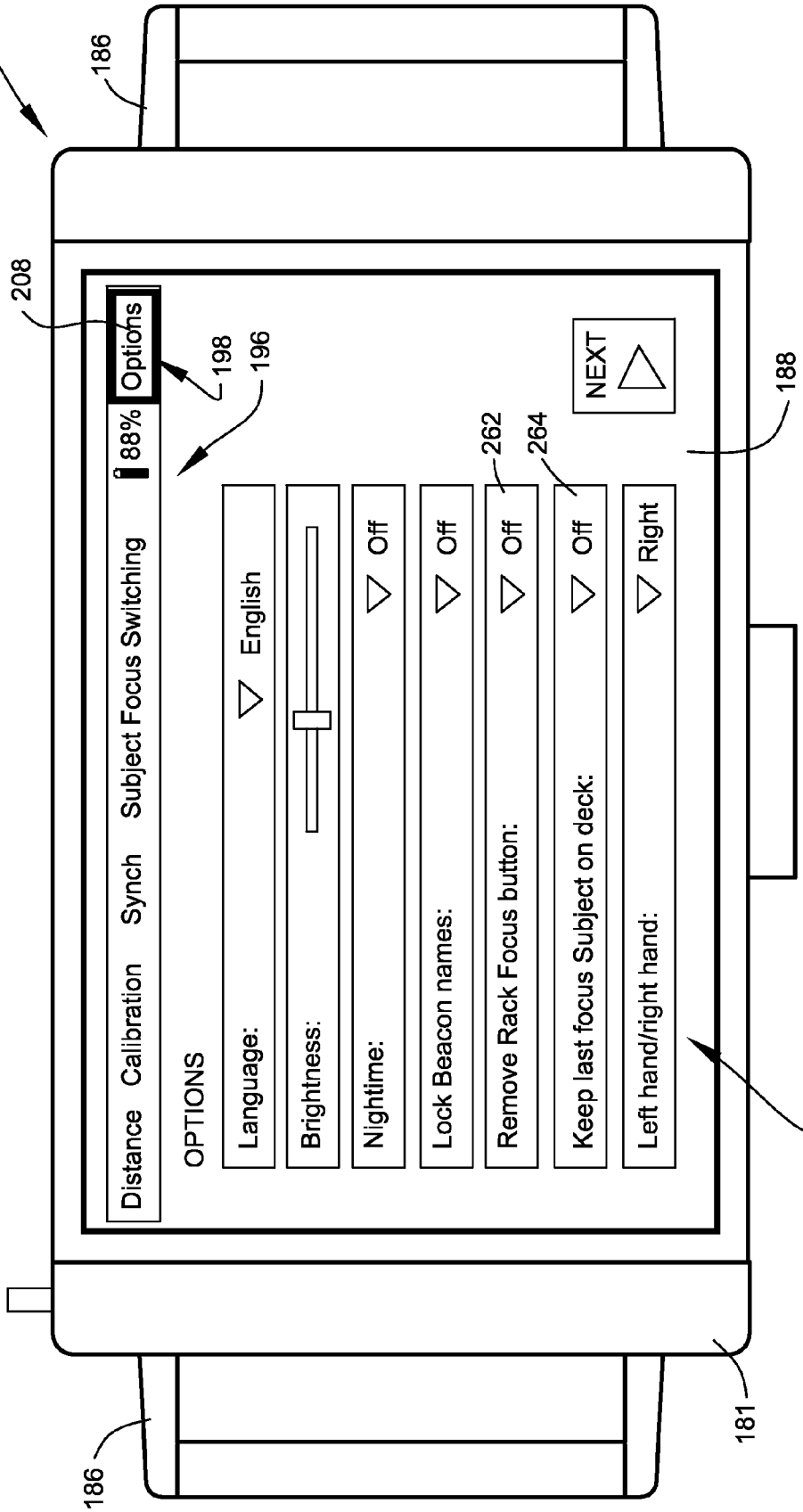
100
180
186
208
Options
198
196
88%
Distance Calibration Synch Subject Focus Switching
OPTIONS
Language:
English
Brightness:
Nightime:
Off
Lock Beacon names:
Off
Remove Rack Focus button:
Off
Keep last focus Subject on deck:
Off
Left hand/right hand:
Right
262
264
NEXT
188
260
181
186

FIG. 15

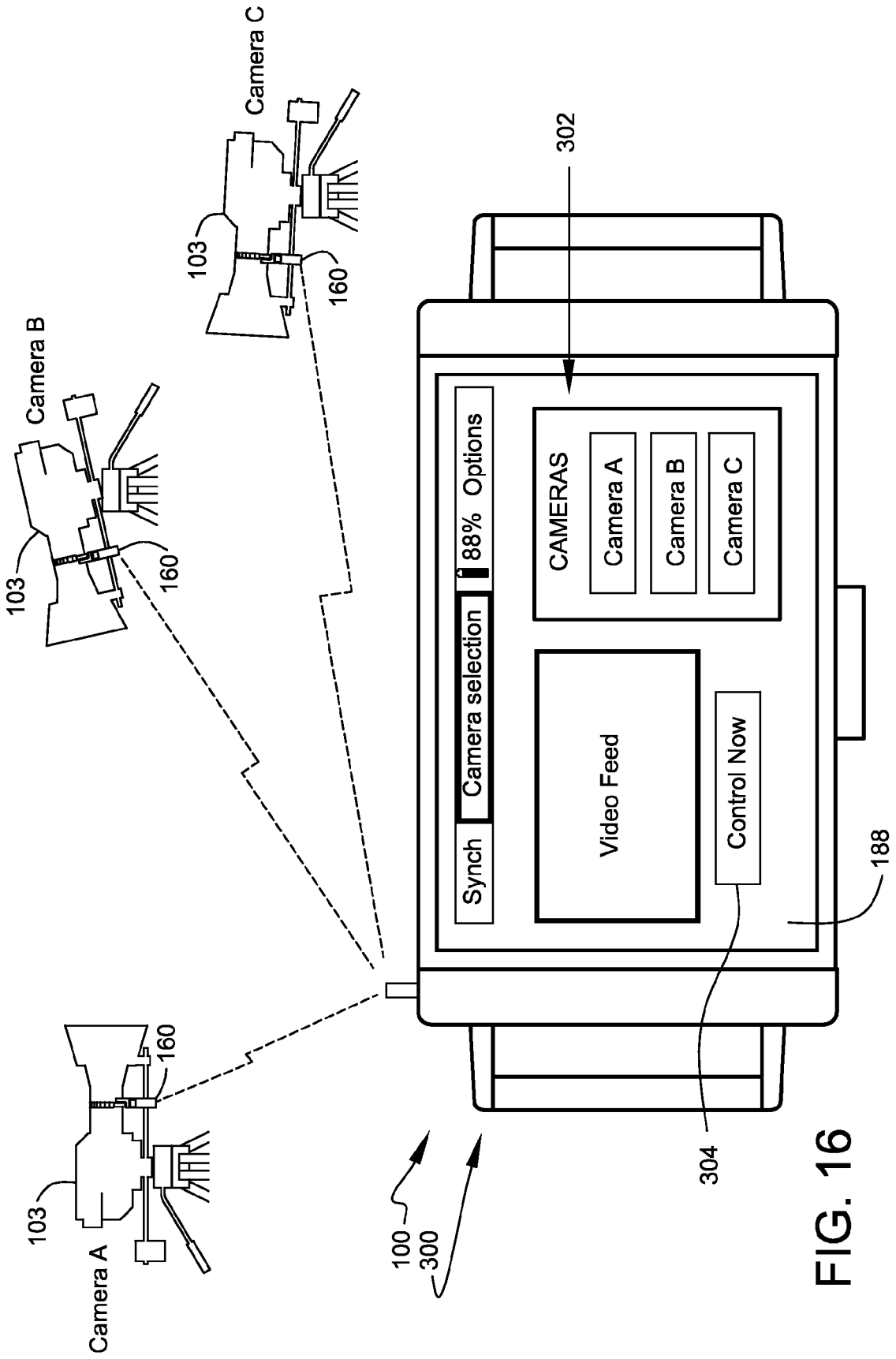
Camera C
103
160
Camera B
103
160
160
103
Camera A
100
300
302
88% Options
Camera selection
Synch
CAMERAS
Camera A
Camera B
Camera C
Video Feed
Control Now
304
188

FIG. 16

LOCATION-TAG CAMERA FOCUSING SYSTEMS

CROSS-REFERENCE TO RELATED APPLICATIONS

This application is a continuation of U.S. Non-Provisional patent application Ser. No. 14/541,621, filed Nov. 14, 2014, and claims the benefit of U.S. Provisional Patent Application No. 61/904,968, filed Nov. 15, 2013, and U.S. Provisional Patent Application No. 61/921,337, filed Dec. 27, 2013, the contents of which are hereby incorporated herein by reference.

BACKGROUND

The disclosed subject matter relates to providing systems relating to improved camera focusing systems using subject location tags. More particularly, the disclosed subject matter relates to providing a system comprising camera accessories and in-lens technologies that allow for the continuous, automated focus of a subject by measuring the distance between the camera and a subject that has been "tagged" with a locator beacon.

Image focus is one the most critical aspects of film and video production. Incorrect image focus can result in significant impacts to production time and production costs. Captured footage that is ruined due to improper focus settings can be particularly damaging during the course of film and video production. Out-of-focus shots or scenes are frequently discarded as unusable by the production team. Unfortunately, such discarded footage often contains subject matter of a one-time-only nature, which cannot be reshot or otherwise reproduced. For example, it is impossible to "reshoot" one-time sporting events, weddings, etc., after they have occurred.

To achieve ideal focus, the distance of a subject from a camera's focal point must be measured and accurately matched to the focal settings of the camera's lens. Often, a scene requires that the camera focus shift between several subjects within the camera's field of view. In addition, the distances between the camera and subjects can be dynamic, as with dolly or jib-mounted cameras, or in scenes where the subjects are moving. An improved system to assist in maintaining proper camera focus during all aspects of image capture would be of great benefit to many in the field.

OBJECTS AND FEATURES OF THE DISCLOSED SUBJECT MATTER

A primary object and feature of the present disclosed subject matter is to provide a system overcoming the above-mentioned problem.

It is another object and feature of the present disclosed subject matter to provide such an improved camera focusing system that uses camera accessories, and/or in-lens technologies, and allows for the continuous range finding of subjects by measuring the distance between the camera and a subject that has been "tagged" with a locator beacon.

It is an additional object and feature of the present disclosed subject matter to provide such an improved camera focusing system that displays calculated distance between the camera and a subject that has been "tagged" with a locator beacon.

It is a further object and feature of the present disclosed subject matter to provide such an improved camera focusing system that allows for the continuous, automated focus of a subject by measuring the distance between the camera and a subject that has been "tagged" with a locator beacon.

It is a further object and feature of the present disclosed subject matter to provide such an improved camera focusing system that allows for the controlled transition of focus between two or more subjects.

It is an additional object and feature of the present disclosed subject matter to provide such an improved camera focusing system that includes a manually-operable follow-focus accessory.

It is a further object and feature of the present disclosed subject matter to provide such an improved camera focusing system that includes a servo-operated follow-focus accessory.

It is another object and feature of the present disclosed subject matter to provide such an improved camera focusing system that enables a single operator to control the focus state of multiple cameras imaging multiple subjects.

A further primary object and feature of the present disclosed subject matter is to provide such a system that is efficient, inexpensive, and useful. Other objects and features of this disclosed subject matter will become apparent with reference to the following descriptions.

SUMMARY

In an embodiment, the disclosed subject matter provides a system relating to generating, for at least one image-capture device, focus-setting data associated with one or more subjects to be captured, such focus-setting data usable to control the focus state of such at least one image-capture device, such system comprising: at least one first location-data generator structured and arranged to generate first location data associated with a current location of at least one first locatable subject; at least one second location-data generator structured and arranged to generate second location data associated with a current location of such at least one image-capture device; and at least one distance calculator structured and arranged to calculate a current distance between such first locatable subject and an imager focus point of such at least one image-capture device, wherein such at least one distance calculator is configured to generate such current distance using such first location data and such second location data; wherein such at least one first location data generator comprises at least one first wireless communicator structured and arranged to wirelessly communicate such first location data; wherein such at least one distance calculator comprises at least one second wireless communicator structured and arranged to acquire the first location data by wirelessly communicating with such at least one first wireless communicator, and at least one distance-data communicator structured and arranged to communicate the calculated distance to at least one image-focus effector controlling the focus state of such at least one image-capture device; wherein such at least one first location data generator comprises at least one first motion coupler configured to physically coupler the movements of such at least one first location data generator and such at least one first locatable subject; and wherein such at least one second location data generator comprises at least one second motion coupler configured to physically couple the movements of such at least one second location data generator and such at least one image-capture device.

Moreover, it provides such a system wherein such at least one distance data communicator comprises at least one distance-data display configured to display the calculated current distance. Additionally, it provides such a system further comprising at least one distance-display supporter structured

and arranged to support such at least one distance data display adjacent such at least one image-capture device.

Also, it provides such a system wherein: such at least one first location-data generator comprises at least one Radio-frequency Identification (RFID) tag structured and arranged to wirelessly transmit at least one first radio signal from which such first location data is derivable; and such at least one second location-data generator comprises at least one RFID signal receiver structured and arranged to receive such at least one first radio signal. In addition, it provides such a system wherein: such at least one first location-data generator comprises at least one first Global Positioning System (GPS) receiver structured and arranged to receive GPS signal data associated with the current location of such at least one first locatable subject, at least one first GPS signal-data processor structured and arranged to process the GPS signal data to form such first location data, and at least one first wireless transmitter structured and arranged to wirelessly transmit the first location data; such at least one second location-data generator comprises at least one second GPS receiver structured and arranged to receive GPS signal data associated with the current location of such at least one image-capture device; and such at least one distance calculator comprises at least one wireless data receiver structured and arranged to wirelessly receive the first location data.

And, it provides such a system further comprising at least one follow-focus device structured and arranged to manipulate at least one focus ring of such at least one image-capture device to assist in establishing, within such at least one image-capture device, a focus state appropriate to the imaging of the subjects to be captured. Further, it provides such a system wherein such at least one distance-display supporter is configured to support such at least one distance-data display from such at least one follow-focus device. Even further, it provides such a system wherein such at least one distance calculator comprises at least one focus-setting acquisition component structured and arranged to acquire at least one current image-focus configuration of such at least one image-capture device.

Moreover, it provides such a system wherein such at least one distance calculator further comprises at least one focus-setting display structured and arranged to display the at least one current image-focus configuration of such at least one image-capture device. Additionally, it provides such a system wherein such at least one focus-setting acquisition component is configured to acquire at least one current image-focus configuration selected from the group consisting essentially of current lens F-stop setting and current lens focal length. Also, it provides such a system wherein such at least one distance calculator further comprises: storage memory structured and arranged to store a plurality of calibration records, each one comprising data entries associated with at least one hardware configuration of such at least one image-capture device; and at least one calibration user interface structured and arranged to assist user retrieval of a selected one of the plurality of saved calibration records; wherein each one of the calibration records contains at least one data entry selected from the group consisting essentially of lens F-stop range lens focal-length range lens focus adjustment range; and wherein such calibration records are usable by such at least one image-focus effector to control the focus state of such at least one image-capture device.

In addition, it provides such a system wherein: such at least one distance calculator further comprises at least one subject-profile generator structured and arranged to generate at least one first focus-setting profile for such at least one first subject; wherein such at least one subject-profile generator generates such at least one first focus-setting profile using such first location data, such second location data, and such at least one current image-focus configuration; and wherein such generated at least one first focus-setting profile is usable by such at least one image-focus effector to control the focus state of such at least one image-capture device. And, it provides such a system further comprising: such at least one image-focus effector; wherein such at least one image-focus effector comprises at least one servomotor-operated follow-focus device structured and arranged to automatically manipulate a focus ring of such at least one image-capture device; wherein such at least one image-focus effector is configured to assist in establishing, within such at least one image-capture device, a focus state appropriate to the imaging of the subjects to be captured in response to such generated at least one first focus-setting profile.

Further, it provides such a system wherein such at least one servomotor-operated follow-focus device further comprises: at least one manually-operated focus control configured to enable manual adjustments of such focus state; at least one manual manipulation detector structured and arranged to detect manual-adjustment inputs; at least one servomotor override to override the automatic operation of such at least one servomotor-operated follow-focus device on detection of at least one manual manipulation of such at least one manually-operated focus control.

Even further, it provides such a system wherein such at least one distance calculator further comprises: at least one multi-subject data-set each data entry of such at least one multi-subject data set identifying one locatable subject of a set comprising multiple locatable subjects; at least one subject-profile generator structured and arranged to generate at least one focus-setting profile for each such data entry of such at least one multi-subject data set; and at least one locatable-subject selector structured and arranged to enable user selecting of at least one such data entry of such at least one multi-subject data set; wherein each selected such at least one focus-setting profile is usable by such at least one image-focus effector to control the focus state of such at least one image-capture device. Moreover, it provides such a system wherein such at least one distance calculator further comprises: at least one n-location data generator structured and arranged to generate n-location data associated with a current location of at least one n-locatable subject; at least one n-subject profile generator structured and arranged to generate at least one n-focus-setting profile for such at least one n-locatable subject using such n-location data; wherein each selected such at least one n-focus-setting profile is usable by such at least one image-focus effector to control the focus state of such at least one image-capture device.

Additionally, it provides such a system wherein such at least one distance calculator further comprises at least one subject-focus transitioner structured and arranged to transition such focus state of such at least one image-capture device between such at least one first focus-setting profile generated for such at least one first locatable subject and such at least one n-focus-setting profile generated for such at least one n-locatable subject. Also, it provides such a system wherein such at least one subject-focus transitioner comprises at least one user transition control structured and arrange to enable user control of a rate of change of such transition of such focus state. In addition, it provides such a system wherein such at least one distance calculator further comprises: at least one computing device, comprising at least one user interface; at least one processor; memory; and at least one program, wherein such at least one program is stored in such memory and configured to be executed by such at least one

processor, such at least one program comprising instructions for displaying at least one menu on such at least one user interface, such at least one menu comprising at least one user-selectable menu item, and receiving at least one user input corresponding to at least one of such at least one user-selectable menu items. And, it provides such a system wherein such at least one program further comprises instructions for such at least one distance calculator to automatically seek locatable subjects. Further, it provides such a system wherein such at least one user interface comprises at least one touch-sensitive display.

Even further, it provides such a system wherein such at least one user interface comprises at least one current image window configured to display at least one current image captured by such at least one image-capture device. Moreover, it provides such a system wherein such at least one user interface further comprises: at least one user-selectable menu item enabling such at least one calibration user interface; and wherein such at least one user-selectable menu item enabling such at least one calibration user interface comprises at least one at least one user-selectable menu item enabling manual input of at least one hardware configuration of such at least one image-capture device. Additionally, it provides such a system wherein such at least one user interface further comprises at least one user-selectable menu item enabling user-initiated acquisition of at least one of such first location data, such second location data, and such n-location data.

Also, it provides such a system wherein such at least one user interface further comprises at least one user-selectable menu item enabling user associating of such n-location data with at least one user-selected name used to identify at least one such n-locatable subject. In addition, it provides such a system wherein such at least one user interface further comprises at least one user-selectable menu item enabling operation of such at least one subject-focus transitioner. And, it provides such a system wherein such at least one user interface further comprises at least one user-selectable menu item enabling operation of such at least one user transition control. Further, it provides such a system wherein such at least one computing device comprises at least one portable computing device.

Even further, it provides such a system further comprising at least one system controller structured and arranged to control multiple image-capture devices operating within such system. Moreover, it provides such a system wherein such at least one controller communication is wireless. Additionally, it provides such a system wherein such at least one image-capture device is a video camera.

In accordance with an embodiment hereof, the disclosed subject matter provides a system relating to generating, for at least one image-capture device, focus-setting data associated with one or more subjects to be captured, such focus-setting data usable to control the focus state of such at least one image-capture device, such system comprising: at least one locator tag structured and arranged to generate first location data associated with a current location of a tagged subject associated with such at least one locator tag; at least one image-device locator structured and arranged to generate second location data associated with a current location of such at least one image-capture device; at least one computing device structured and arranged to calculate a current distance between such locatable subject and an imager focus point of such at least one image-capture device, wherein such at least one distance calculator is configured to generate such current distance using such first location data and such second location data; at least one distance-data display configured to display the calculated current distance; and at least one follow-focus device structured and arranged to manipulate at least one focus ring of such at least one image-capture device to assist in establishing, within such at least one image-capture device, a focus state appropriate to the imaging of the subjects to be captured; wherein such at least one locator tag comprises at least one first wireless communicator structured and arranged to wirelessly communicate such first location data; wherein such at least one computing device comprises at least one second wireless communicator structured and arranged to acquire the first location data by wirelessly communicating with such at least one first wireless communicator; and wherein such at least one distance-data display comprises at least one display mount structured and arranged to assist mounting of such at least one distance-data display adjacent such at least one follow-focus device.

Also, it provides such a system wherein such at least one display mount comprises at least one computing-device mount structured and arranged to assist mounting of such at least one computing device adjacent such at least one follow-focus device. In addition, it provides such a system further comprising: at least one focus-setting acquisition component structured and arranged to acquire at least one current image-focus configuration of such at least one image-capture device; and at least one focus-setting display structured and arranged to display the at least one current image-focus configuration of such at least one image-capture device. And, it provides such a system wherein such at least one computing device comprises at least one subject-profile generator structured and arranged to generate at least one focus-setting profile for each such tagged subjects; wherein such at least one subject-profile generator generates such at least one focus-setting profile using such first location data, such second location data, and such at least one current image-focus configuration; and wherein each such generated at least one focus-setting profile is usable to control the focus state of such at least one image-capture device.

Further, it provides such a system further comprising: at least one servomotor-operated follow-focus device structured and arranged to automatically manipulate a focus ring of such at least one image-capture device; wherein at least one servomotor-operated follow-focus device is controlled by such at least one computing device; and wherein such at least one servomotor-operated follow-focus device is configured to assist in establishing, within such at least one image-capture device, a focus state appropriate to the imaging of the subjects to be captured. Even further, it provides such a system wherein such at least one computing device further comprises: at least one user interface; at least one processor; memory; and at least one program, wherein such at least one program is stored in such memory and configured to be executed by such at least one processor, such at least one program comprising instructions for displaying at least one menu on such at least one user interface, such at least one menu comprising at least one user-selectable menu item, and receiving at least one user input corresponding to at least one of such at least one user-selectable menu items.

Even further, it provides such a system wherein such at least one user interface comprises at least one touch-sensitive display. Even further, it provides such a system wherein such at least one computing device communicates with such at least one servomotor-operated follow-focus device wirelessly. In accordance with another embodiment hereof, the disclosed subject matter provides a method relating to generating, for at least one image-capture device, focus-setting data associated with one or more subjects to be captured, such focus-setting data usable to control the focus state of such at least one image-capture device, such method comprising the

steps of: providing at least one locator tag structured and arranged to generate first location data associated with a current location of a tagged subject associated with such at least one locator tag; providing at least one image-device locator structured and arranged to generate second location data associated with a current location of such at least one image-capture device; providing at least one computing device structured and arranged to calculate a current distance between such locatable subject and an imager focus point of such at least one image-capture device; generating such current distance using such first location data and such second location data; providing at least one distance-data display configured to display the calculated current distance; and providing at least one follow-focus device structured and arranged to manipulate at least one focus ring of such at least one image-capture device to assist in establishing, within such at least one image-capture device, a focus state appropriate to the imaging of the subjects to be captured; manipulating such at least one focus ring of such at least one image-capture in response to the calculated current distance displayed; wherein such at least one locator tag comprises at least one first wireless communicator structured and arranged to wirelessly communicate such first location data; wherein such at least one computing device comprises at least one second wireless communicator structured and arranged to acquire the first location data by wirelessly communicating with such at least one first wireless communicator; and wherein such at least one distance-data display comprises at least one display mount structured and arranged to assist mounting of such at least one distance-data display adjacent such at least one follow-focus device.

In accordance with an embodiment hereof, the disclosed subject matter provides each and every novel feature, element, combination, step and/or method disclosed or suggested by this provisional patent application.

BRIEF DESCRIPTION OF THE DRAWINGS

FIG. **1** shows a perspective view diagrammatically illustrating a camera, modified to comprise a focus assist device, according to an embodiment of the disclosed subject matter.

FIG. **2** shows a perspective view, further illustrating the focus assist device, of FIG. **1**.

FIG. **3** shows a diagram illustrating features of the focus assist device and use of the image-capture device and interoperation with the camera of FIG. **1**.

FIG. **4** shows a schematic diagram illustrating an embodiment of applicant's locator tag.

FIG. **5** shows a schematic diagram illustrating an embodiment of applicant's locator tag.

FIG. **6** shows a perspective view diagrammatically illustrating a servo-operated focus assist device, according to an embodiment of the disclosed subject matter.

FIG. **7** shows a front-elevation view, illustrating a servo-operated focus assist device of FIG. **6** mounted adjacent a follow-focus gear of a focus ring of a camera, according to an embodiment of the disclosed subject matter.

FIG. **8** shows a block diagram illustrating functional elements of the servo-operated focus assist device of FIG. **6**.

FIG. **9** shows a perspective view diagrammatically illustrating a camera, modified to comprise the servo-operated focus assist device of FIG. **6**, which is remotely controlled by a portable user interface, according to an embodiment of the disclosed subject matter.

FIG. **10** shows a front view, illustrating a portable user interface, according to an embodiment of the disclosed subject matter.

FIG. **11** shows a front view, illustrating the portable user interface of FIG. **9**, displaying a focus-distance display menu, according to an embodiment of the disclosed subject matter.

FIG. **12** shows a front view, illustrating the portable user interface of FIG. **9**, displaying a calibration menu, according to an embodiment of the disclosed subject matter.

FIG. **13** shows a front view, illustrating the portable user interface of FIG. **9**, displaying a tag synchronization menu, according to an embodiment of the disclosed subject matter.

FIG. **14** shows a front view, illustrating the portable user interface of FIG. **9**, displaying a subject focus switching menu, according to an embodiment of the disclosed subject matter.

FIG. **15** shows a front view, illustrating the portable user interface of FIG. **9**, displaying an options menu, according to an embodiment of the disclosed subject matter.

FIG. **16** shows a diagram, schematically illustrating a master controller configured to control a plurality of cameras from a central location, according to an embodiment of the disclosed subject matter.

DETAILED DESCRIPTION

Applicant has developed a camera focusing system **100**, including range-finding camera accessories designed to assist in establishing proper focus of target subjects. Generally stated, the presently-disclosed system is configured to determine the focus distance between a camera imager and a subject to be captured by establishing the current locations of the camera and the target subject.

Referring to the drawings, FIG. **1** shows a perspective view diagrammatically illustrating camera **103** (indicated by the dashed-line depiction), which has been modified to comprise applicant's focus assist device **102**, according to an embodiment of the disclosed subject matter. FIG. **2** shows a perspective view, further illustrating focus assist device **102**, according to the embodiment of FIG. **1**. A primary capability of focus assist device **102** is the ability of the system to accurately calculate focus distances to target subjects. To achieve perfect focus, the distance of a subject from the focal point of camera **103** must be measured and accurately matched to the focal ring of camera lens **105**. Focus assist device **102** assists the operator of camera lens **105** to correctly adjust the focus state of camera **103** by displaying such calculated distances at or near the focal ring of camera lens **105**. This range-finding feature allows the lens operator to consistently pull focus to the correct distance.

In an embodiment, the camera focus assist device **102** is equipped with at least one distance computation unit **112** having distance display **114**, as shown. Distance computation unit **112** is configured to calculate focus distances between camera **103** and one or more locatable subjects **113** (see FIG. **3**). Distance computation unit **112** is configured to receive and process distance data associated with a locatable subject **113**. Results of such distance calculations appear on distance display **114** and may be used by the operator of camera lens **105** to properly adjust the focus state of camera **103** (at least embodying herein at least one distance-data communicator structured and arranged to communicate the calculated distance to at least one image-focus effector controlling the focus state of such at least one image-capture device). System implementations supporting the above-described features are further described by and/or in reference to FIG. **3**.

In an embodiment, the focus assist device **102** further comprises at least one follow-focus unit **104**, as shown in FIGS. **1** and **2**. Follow-focus unit **104** is configured to assist the camera operator to manually adjust the focal ring of camera lens

105. Follow-focus unit 104 comprises a gear set that operably links the outer focus wheel 108 and inner drive gear 109. Drive gear 109 is configured to engage a ring gear 106, which is mounted to, or forms an integral part of, a focus ring of camera lens 105, as shown.

Manipulation of focus wheel 108 results in a smooth vibration-free rotation of ring gear 106. Thus, follow-focus unit 104 enables the operator to establish, within camera 103, a focus state appropriate to the imaging of the subjects to be captured. Commercial follow-focus units, having components adaptable to function as follow-focus unit 104, include models selected from the Z-Focus® line produced by the ZacutoUSA Corporation of Chicago Ill.

Focus assist device 102 comprises at least one mount 110 configured to mount the focus assist device 102 in a position adjacent to camera 103, as shown.

In an embodiment, mount 110 is an integral component of follow-focus unit 104, as shown in FIGS. 1 and 2. Mount 110 is compatible with at least one of three commonly used camera rail systems 111, such as, for example, the 15 millimeter (mm) matte box support rods indicated by the dashed-line depiction of FIG. 1. Upon reading this specification, those with ordinary skill in the art will now appreciate that, under appropriate circumstances, considering such issues as design preference, user preferences, marketing preferences, cost, structural requirements, available materials, technological advances, etc., other mounting arrangements such as, for example, mounts configured to couple to a camera body, mounts configured to couple to a tripod, etc., may suffice.

In the embodiment of FIG. 1 and FIG. 2, distance computation unit 112 is contained within housing 115 and is supported by the follow-focus unit 104, as shown. Housing 115 of distance computation unit 112 comprises distance display 114 along with user input controls 121 and indicator lights forming user interface 124. In addition, arrangements of housing 115 further include provisions for battery compartments, external data ports, external power ports, etc.

FIG. 3 shows a diagram illustrating an embodiment of features and arrangements of the focus assist device 102, according to FIG. 1. Camera focusing system 100 operates by associating a locator tag 116 with each subject to be captured by camera 103. Locator tags 116 (also referred to herein as "locator beacon" or simply "beacon") are configured to transmit at least one wireless signal detectable by computation unit 112 (at least embodying herein wherein such at least one first location data generator comprises at least one first wireless communicator structured and arranged to wirelessly communicate such first location data). The wireless signal contains location-data usable relating to computation unit 112 to determine the current location of the tagged subjects. Thus, any target subject becomes locatable by the system if the subject possesses a locator tag 116 and is within the detection range relating to computation unit 112.

As an example of the system, two locatable subjects 113, identified in FIG. 3 as subject "A" and subject "B", are located within the field of view 117 of camera 103 (at least embodying herein at least one image-capture device). Each locatable subject 113 carries a locator tag 116 capable of transmitting current subject-location data to a wireless-signal receiver 118 of focus assist device 102 (at least embodying herein at least one second wireless communicator structured and arranged to acquire the first location data by wirelessly communicating with such at least one first wireless communicator). Each locator tag 116 (at least embodying herein at least one first location-data generator structured and arranged to generate first location data associated with a current location of at least one first locatable subject) comprises a distinct identifier allowing focus assist device 102 to differentiate signals originating from multiple locator tags 116 and associated locatable subjects 113. Locator tags 116 are designed to move with locatable subject 113, for example, by surface mounting to a person or an object, clipping to an article of clothing worn by an actor, or by adhering to a portion of a vehicle (at least embodying herein wherein such at least one first location data generator comprises at least one first motion coupler configured to physically couple the movements of such at least one first location data generator and such at least one first locatable subject). Thus, locator tag 116 identified as "Tag A" moves with subject "A" and locator tag 116 identified as "Tag B" moves with subject "B".

In an embodiment, the camera focusing system 100 includes at least two cameras 103 and a distance computation unit 112, and at least one locator tag 116 allowing multiple cameras 103 to be used with multiple locator tags 116 allowing the system 100 to automatically focus the cameras 103 on subjects 113 with tags 116. In an embodiment, the locator tags 116 communicate with one another and the cameras 103 to determine distances in real time. In an embodiment, the camera focusing system 100 uses one or more stationary references points or anchors to increase the accuracy of the distance calculation between the subjects 113 with tags 116 and the camera 103. In an embodiment, the stationary reference points generate a radio transmission that communicates with the tags 116 and the distance computation unit 112 to determine distances between the elements in real time. In an embodiment, the locator tags 116 communicate with one another, the stationary reference points, and the camera 103 to determine distances between the elements in real time.

Distance computation unit 112 comprises at least one camera locator 120 designed to generate location data associated with a current location of camera 103 (at least embodying herein second location data associated with a current location of such at least one image-capture device). The method of generating such secondary location data for camera 103 is dependent on the method used to generate the first subject location data associated with the target subjects, and this method will be discussed further in a later section of the present disclosure.

Distance computation unit 112 utilizes current subject-location data received from locator tags 116 and the secondary location data for camera 103 to calculate the distances between imager focus point 122 and the target subjects located within field of view 117 (at least embodying herein wherein such at least one distance calculator is structured and arranged to calculate a current distance between such first locatable subject and an imager focus point of such at least one image-capture device and wherein such at least one distance calculator is configured to generate such current distance using such first location data and such second location data). For example, distance computation unit 112 utilizes current subject-location data received from "Tag A" and secondary location data from camera locator 120 to calculate distance D1 between subject "A" and imager focus point 122 of camera 103. Thus, distance computation unit 112 generates at least one focus-setting profile for subject "A" that is usable by the operator of camera 103 (at least embodying herein at least one image-focus effector) to control the focus state of camera 103 (at least embodying herein wherein such at least one subject-profile generator generates such at least one first focus-setting profile using such first location data, such second location data, and such at least one current image-focus configuration; and wherein such generated at least one first focus-setting profile is usable by such at least one image-focus effector to control the focus state of such at

least one image-capture device). Similarly, distance computation unit **112** utilizes current subject-location data received from "Tag B" and secondary location data from camera locator **120** to calculate distance D2 between subject "B" and imager focus point **122** of camera **103**. Thus, distance computation unit **112** generates at least one focus-setting profile for subject "B" that is usable by the operator of camera **103**.

Referring to the block diagram of FIG. **3**, distance computation unit **112** comprises at least one user interface **124**, at least one processor **126**, and system memory **127**, as shown. A data link **140**, comprising wireless-signal receiver **118**, functions to receive first location data from locator tags **116** and pass the data to processor **126**.

Distance computation unit **112** implements the above-described range-finding functions using wireless communication technologies. In an embodiment, Radio-frequency Identification (RFID) technology is used, as generally described relating to FIG. **4**.

FIG. **4** shows a schematic diagram illustrating an RFID-enabled locator tag **116**, according to an embodiment of the disclosed subject matter. The RFID-enabled distance computation unit **112** utilizes a calculation of distance D1 based on the time-of-flight of a radio signal. More specifically, the RFID-enabled distance computation unit **112** measures the time it takes for a radio signal **125** to travel from transmitter antenna **128** to the tag antenna **130** and back to reader antenna **132**. The distance from camera **103** to the tag is calculated based on the travel speed of a radio wave at the speed of light. The RFID-enabled locator tag **116** may comprise an active (or passive) transponder **134** to relay the signal. In an embodiment, transmitter antenna **128** and reader antenna **132** comprise an extension of data link **140** and, depending on engineering preference, may comprise a single send-receive antenna (at least embodying herein wherein such at least one first location-data generator comprises at least one RFID tag structured and arranged to wirelessly transmit at least one first radio signal from which such first location data is derivable; and such at least one second location-data generator comprises at least one RFID signal receiver structured and arranged to receive such at least one first radio signal).

Implementation of a camera locator **120** within the RFID-enabled distance computation unit **112** is accomplished through a simple fixed physical association of reader antenna **132** and imager focus point **122** (wherein such at least one second location data generator comprises at least one second motion coupler configured to physically couple the movements of such at least one second location data generator and such at least one image-capture device). Upon reading this specification, those with ordinary skill in the art will now appreciate that, under appropriate circumstances, considering such issues as design preference, user preferences, marketing preferences, cost, available materials, technological advances, etc., other RFID technologies such as, for example, measurement of signal strength, angle of arrival of the radio wave from the tag measured at several reader locations to draw locating vectors back toward the tag, calculating the distance through triangulation of multiple beacons, etc., may suffice. In addition, other wireless communication technologies may be deployed using time-of-flight of a radio signal, such as Bluetooth®-enabled locator tags **116**, ultra-wideband technology enabled locator tags **116**, ultra-wideband-enabled locator tags **116**, such as impulse radio transmission, Wi-Fi triangulation or GSM cellular triangulation of locator tags **116** and associated system **100** components, and corresponding hardware and software with the distance computation unit **112**.

In an embodiment, distance computation unit **112** implements the above-described range-finding functions using a set of Global Positioning System (GPS) receivers, as generally described in FIG. **5**.

FIG. **5** shows a schematic diagram illustrating a GPS-enabled locator tag **116**. The GPS-enabled locator tag **116** ("Tag A") comprises at least one GPS receiver **136** structured and arranged to receive GPS signal data associated with the current location of locatable subject **113** (subject "A").

GPS receiver **136** comprises at least one first GPS signal-data processor **138** structured and arranged to process the GPS signal data to generate current location data for locatable subject **113** (subject "A"). GPS-enabled locator tag **116** contains a wireless transmitter **142** to transmit the subject location data to a wireless receiver **144** of data link **140** located within the GPS-enabled distance computation unit **112**, as shown (at least embodying herein wherein such at least one distance calculator comprises at least one wireless data receiver structured and arranged to wirelessly receive the first location data). Upon reading this specification, those with ordinary skill in the art will now appreciate that, under appropriate circumstances, considering such issues as design preference, user preferences, marketing preferences, cost, technological advances, etc., other tagging technologies, such as, for example, utilizing a GPS-enable mobile phone as a beacon, implementing communication using IR-based data signals, etc., may suffice.

Implementation of camera locator **120** within the GPS-enabled distance computation unit **112** is accomplished by integration of a second GPS receiver **146** within the GPS-enabled distance computation unit **112**. Second GPS receiver **146** receives GPS signal data associated with the current location of camera **103** and passes the location data to processor **126** (see also FIG. **3**). Distance D1 is calculated by comparing the GPS location data.

Referring again to FIG. **3**, an embodiment of the camera focusing system **100** further includes at least one focus-setting acquisition component **150**. Focus-setting acquisition component **150** is configured to acquire current distance setting of the focal ring of camera lens **105**. Image-focus settings acquired by focus-setting acquisition component **150** include current lens F-stop setting and current lens focal length of camera lens **105**. The F-stop setting and lens focal lengths are utilized to calculate depth of field and focal range of camera lens **105**.

Current distance settings of the focal ring of camera lens **105** are displayed at user interface **124** (see FIG. **2**), thus allowing the operator of camera **103** to confirm the accuracy of the image focus. Referring again to FIG. **2**, current distance settings of the focal ring of camera lens **105** are displayed on distance display **114** of focus assist device **102** (at least embodying herein at least one focus-setting display structured and arranged to display the at least one current image-focus configuration of such at least one image-capture device).

In an embodiment, locator tags **116** include an on/off switch, battery housing, and power input for recharging. In addition, the system embodiments have the ability to control refresh rate options for locator tags **116**.

Referring again to the illustration of FIG. **2**, user interface **124** of distance computation unit **112** includes an On/Off switch **151**, Synch Button **152**, distance display **114**, and confirmation light **154**, as shown. Synch Button **152** when activated, initiates a search for all locator tags **116** within broadcast range. A green illumination confirmation light **154** indicates that a locator tag **116** is being tracked.

Distance display **114** shows the calculated distance from camera to locator tag **116** and, if equipped with the focus-setting acquisition component **150** of FIG. **3**, the current distance setting of the focal ring of camera lens **105**. It is noted that embodiments of camera focusing system **100** are further configured to record the range of focus adjustment of camera lens **105**. An example technology adaptable for use as focus-setting acquisition component **150** is a Cinematography Electronics/i Lens Display Unit produced by Cooke Optics Limited of Thurmaston Leicester, United Kingdom.

FIG. **6** shows a perspective view diagrammatically illustrating a servo-operated focus assist device **160**, according to an embodiment of the present disclosed subject matter. Focus assist device **160** comprises distance computation unit **161** interoperating with electrically-operated servomotor **163**, as shown. FIG. **7** shows a front-elevation view, illustrating servo-operated focus assist device **160** mounted adjacent follow-focus ring gear **106** of a focus ring of a camera **103**. FIG. **8** shows a block diagram illustrating functional elements of the servo-operated focus assist device **160** of FIG. **6**.

Referring to the illustrations of FIG. **6** through FIG. **8**, servomotor **163** is configured to operate a gear drive **164**, which engages the ring gear **106**/focus ring of camera lens **105**, as depicted in FIG. **7** (and conceptually illustrated in FIG. **1**). Servo-operated focus assist device **160** (at least embodying herein at least one image-focus effector) is configured to automatically adjust the focus state of camera **103**, as appropriate to the proper imaging of locatable subjects **113**. More specifically, servo-operated focus assist device **160** is configured to automatically adjust the focus state of camera **103** in response to subject location profiles generated by distance computation unit **161** using location data received from locator tags **116** (at least embodying herein wherein such at least one image-focus effector is configured to assist in establishing, within such at least one image-capture device, a focus state appropriate to the imaging of the subjects to be captured in response to such generated at least one first focus-setting profile).

Distance computation unit **161** includes the previously-described features and functions of distance computation unit **112** (see FIG. **3**) and the additional motor control and sensor elements shown in FIG. **8**. Servomotor **163** of the present embodiment comprises a stepper motor controlled by processor **126** communicating through at least one digital motor controller **166**, as shown. In the present disclosure, motor controller **166** may comprise indexers, drivers, etc., as required to operate servomotor **163**. Distance data is converted by distance computation unit **161** into control signals used to operate servomotor **163**. In an embodiment of the present system, control signals from processor **126** are communicated through motor controller **166** and passed to servomotor **163** via signal link **171** (at least embodying herein at least one distance-data communicator structured and arranged to communicate the calculated distance to at least one image-focus effector controlling the focus state of such at least one image-capture device).

A manual focus detector **174** functions such that any manual manipulation of the lens focus ring or (if equipped) drive gear **109** of the follow focus is detected by the system and results in a temporary termination of the system's automatic focus functions. In an embodiment, manual focus detector **174** includes at least one strain gauge sensor. The strain gauge sensor has an output signal which is proportional to the varying amount of pressure. Servo-operated focus assist device **160** includes control logic to override the operation of servomotor **163** when output signal of the strain gauge sensor exceeds a preset level (at least embodying herein at least one manually-operated focus control configured to enable manual adjustments of such focus state; at least one manual manipulation detector structured and arranged to detect manual-adjustment inputs; and at least one servomotor override to override the automatic operation of such at least one servomotor-operated follow-focus device on detection of at least one manual manipulation of such at least one manually-operated focus control).

Both distance computation unit **161** and servomotor **163** are located within housing **168**. Housing **168** comprises at least one mount **133** configured to mount housing **168** in a position adjacent camera **103**, as shown in FIG. **7**. In an embodiment of FIG. **6**, mount **133** is compatible with at least one of three commonly used camera rail systems **111**, such as, for example, the 15 millimeter (mm) matte box support rods indicated by the dashed-line depiction of FIG. **1**.

The outside of housing **168** is configured to support user interface **124**, as shown. User interface **124** of servo-operated focus assist device **160** comprises an On/Off switch **150**, a Synch Button **152**, a distance display **114**, and a tracking confirmation light **154**, as shown. Synch Button **152**, when activated, initiates a search for all locator tags **116** within broadcast range. A green illumination of tracking confirmation light **154** indicates that at least one locator tag **116** is being tracked.

Referring to FIG. **6**, distance display **114** shows: the calculated distance from camera to locator tag **116**; and, if equipped with focus-setting acquisition component **150**, the current distance setting of the focal ring of camera lens **105**. In addition, user interface **124** of servo-operated focus assist device **160** includes a manual override switch **172** to permit the operator to revert to manual focus by overriding the automatic functions of the system.

Both distance computation unit **161** and servomotor **163** are powered by onboard batteries (not shown). In addition, servo-operated focus assist device **160** includes external power and wired control input ports **175**, as shown.

Alternately, servomotor **163** may be incorporated within camera lens **105** with distance computation unit **161** located within the camera lens **105**, alternately within the body of camera **103** or alternately located in a portable computing device, as further described below. The in-lens embodiment is configured to focus the lens by manipulation of the camera lens **105** or manipulation of the focus ring of the camera lens **105**, wherein the camera lens **105** or focus ring of the camera lens **105** is driven by servomotor **163**. The in-lens servomotor **163** is configured to be selectively set to either automatic actuation or manual operation.

Servo-operated focus assist device **160** enables remotely-controlled focusing of camera **103**. Thus, an important advantage of the present embodiment is that the operator of camera lens **105** is no longer required to be located near camera **103** to pull focus. Moreover, various arrangements of servo-operated focus assist device **160** enable the use of one or more remotely-located input devices. For example, an embodiment of the present system includes remote finger triggers **176** that are incorporated within handles **178** of the shoulder-supported camera rail system **111** illustrated in FIG. **1**. Finger triggers **176** are operably coupled to distance computation unit **161** to allow a single operator of camera **103** to remotely signal servo-operated focus assist device **160** to switch focus between two locatable subjects **113**. In this embodiment, the operator initiates a transition between two focus-setting profiles generated by distance computation unit **161**. Manipulation of finger triggers **176** may initiate the processor-controlled transition between a focus-setting profile for subject "A" and a focus-setting profile for subject "B". It is again

noted that focus-setting profiles are generated by distance computation unit **161** for locatable subjects **113** using current subject-location data and current camera location data. Upon reading this specification, those with ordinary skill in the art will now appreciate that, under appropriate circumstances, considering such issues as design preference, user preferences, marketing preferences, cost, technological advances, etc., other control arrangements such as, for example, subject tracking including automatic control of camera pan/tilt, etc., may suffice.

An embodiment of the present system implements at least one remote video monitoring and control device, wherein user interface **124** comprises a touch-screen display located within a hand-held portable device, as further described in FIG. **9**. Such portable devices allow members of the camera-assistant team to control the camera lens **105** from a remote location. This allows the focus puller to stand away from camera **103** if needed.

FIG. **9** shows a perspective view diagrammatically illustrating camera **103**, modified to comprise servo-operated focus assist device **160** that is remotely controlled by portable user interface **180**, according to an embodiment of the disclosed subject matter. Portable user interface **180** comprises a hand-held device containing user interface **124**, as shown. In an embodiment of the present system, user interface **124** comprises touch-sensitive display screen **188** that the user can control through simple or multi-touch gestures. Portable user interface **180** comprises a durable outer housing **181** supporting touch-sensitive display screen **188**, as shown. In addition, outer housing **181** contains power input port **184**, battery storage (not shown), peripheral hand grips **186**, and communication ports **190** to enable hard-wired connections to servo-operated focus assist device **160**. An embodiment of the portable user interface **180** comprises at least one wireless communicator **192** configured to enable wireless communication between portable user interface **180** and servo-operated focus assist device **160**, as shown.

Outer housing **181** comprises at least one mount **187** to permit portable user interface **180** to be attached to traditional camera riggings. A version of mount **187** enables portable user interface **180** to be attached to camera rail systems **111**.

Referring again to the block diagram of FIG. **3**, distance computation unit **161** comprises at least one executable program **194**, as shown. Program **194** is stored in system memory **127** and is configured to be executed by processor **126**. Program **194** comprises instructions for displaying a series of menus **196** on touch-sensitive display screen **188**, as shown in FIG. **10**.

FIG. **10** shows a front view, illustrating portable user interface **180**, according to another embodiment of the present disclosed subject matter. Touch-sensitive display screen **188** is used to generate a set of system menus **196**. Each menu **196** comprises at least one menu item **198**, as shown. Menu items **198** are either of an informational nature or function to receive at least one user input corresponding to an action to be performed by the system apparatus. Menu items **198** allow the user to input or select lens information, customize the name of subjects, switch focusing from subject to subject, select speed of focusing, save lens settings, and automatically calibrate the lenses, as described below.

On startup of portable user interface **180**, program **194** is configured to display primary menu **196** on touch-sensitive display screen **188**. A primary menu **196** includes the following selectable menu items **198**: "Distance" menu item **200**, "Calibration" menu item **202**, "Synch" menu item **204**, "Subject focus switching" menu item **206**, and "Options" menu item **208**. Each selectable menu item **198** of the primary menu **196** provides a user-selectable link to a submenu operated by program **194**, as generally described in FIG. **11** through FIG. In addition, program **194** displays a battery status indicator **210**, as shown.

User selection of "Distance" menu item **200** within the primary menu **196** results in the display of focus-distance display menu **212** on touch display screen **188**, shown in FIG. **11**. FIG. **11** shows a front view, illustrating the portable user interface of FIG. **9**, displaying a focus-distance display menu **212**.

Focus-distance display menu **212** includes a video window **214** displaying a live video feed from camera **103** (at least embodying herein at least one current image window configured to display at least one current image captured by such at least one image-capture device) and distance display **114** showing the calculated distance from camera **103** to locator tag **116**. In addition, focus-distance display menu **212** comprises lens setting display **216** showing current distance settings of the focal ring of camera lens **105**. It is noted that program **194** interoperates with focus-setting acquisition component **150** to generate the content of lens setting display **216**.

User selection of "Calibration" menu item **202** within the primary menu **196** results in the display of calibration menu **218** on touch display screen **188**, shown in FIG. **12**. FIG. **12** shows a front view, illustrating the portable user interface of FIG. **9**, displaying a calibration menu **218**, according to an embodiment of the disclosed subject matter. Calibration menu **218** includes "Automatic lens calibration" menu item **220**, "Lens length" menu item **222**, "F-Stop" menu item **224**, "Focus ring distances point setting" menu item **226**, "Zoom lens length" calibration menu item **228**, and "Save Calibration" menu item **230**, as shown.

"Lens length input" menu item **222** is used to calculate depth of field/focal range of camera lens **105**. "F-Stop" menu item **224** is used to calculate depth of field/focal range of camera lens **105**.

In addition, calibration menu **218** includes "Saved calibrations" menu item **232**, Saved Calibrations List **234**, and "Select Calibration" menu items **236**.

"Saved calibrations" menu item **232** is used to set F-stop, focus ring settings, and lens length settings in system memory **127**. This allows the configuration for already calibrated lenses to be easily set in the future, thus reducing the need to re-calibrate as camera lenses **105** are interchanged. Saved calibrations list **234** shows a list of saved calibrations. Saved calibrations are editable by the user (at least embodying herein at least one at least one user-selectable menu item enabling manual input of at least one hardware configuration of such at least one image-capture device).

Program **194** further comprises instructions for distance computation unit **161** to automatically seek locatable subjects **113** (at least embodying herein wherein such at least one program further comprises instructions for such at least one distance calculator to automatically seek locatable subjects). User selection of "Synch" menu item **204** within the primary menu **196** results in the display of tag synchronization menu **240** on touch display screen **188**, as shown in FIG. **13**. FIG. **13** shows a front view, illustrating portable user interface **180** displaying tag synchronization menu **240**, according to another embodiment of the disclosed subject matter.

Tag synchronization menu **240** allows the user to initiate the automatic seeking of locatable subjects **113** within the detection range of the device. "Detect beacons" menu item **242**, when selected, results in the system searching for all readable locator tags **116** and lists all detected locator tags **116** as "Subjects."

Program **194** is configured to generate a multi-subject data-set **205** with each data entry of multi-subject data set **205** identifying a single locatable subject **113** of the multiple locatable subjects **113** within the detection range of the system. Subject location profiles are actively generated by program **194** using location data received from locator tags **116** (at least embodying herein at least one subject-profile generator structured and arranged to generate at least one focus-setting profile for each such data entry of such at least one multi-subject data set). Multi-subject data-set **205** and their associated subject-location profiles are stored in system memory **127**.

Tag synchronization menu **240** includes Display field **244**, which lists potentially "in-focus" locatable subjects **113** (tagged subjects) of multi-subject data set **205**. By default, the first two located locatable subjects **113** are listed as "Subject_A" and "Subject_B". Each additional located subject is assigned the next available identification letter as shown (at least embodying herein wherein such at least one user interface further comprises at least one user-selectable menu item enabling user-initiated acquisition of at least one of such first location data, such second location data, and other location data).

The user will be able to edit the default letter names assigned to the locator tags **116** by selecting the default letter designation of a displayed locator tag **116** and pressing the "Edit Beacon Name" menu item **246**. The selected locator tag **116** is highlighted with a color, such as blue, indicating that the entry is available for editing. The user may then change the name so that instead of indicating a located subject as "Subject_A", the display entry will read as "Male_Actor", "John_Smith", "Red_Apple", etc. When "Edit Beacon Name" menu item **246** is selected, program **194** brings up a keyboard interface for ease of editing.

Display field **244** also shows distances of all locator tags **116** to camera **103** and battery power of all locator tags **116**. Locator tags **116** detected as having below 25% battery power are highlighted with an alert color, such as red.

User selection of "Subject focus switching" menu item **206** within the primary menu **196** results in the display of subject focus switching menu **250** on touch display screen **188**, as shown in FIG. **14**. FIG. **14** shows a front view, illustrating the portable user interface of FIG. **9**, displaying subject focus switching menu **250**, according to an embodiment of the disclosed subject matter.

Subject focus switching menu **250** comprises "Rack focus" menu item **252**, digital focus speed slider **254**, video window **214**, distance display **114**, lens setting display **216**, "Rack Focus Speed Setting" menu item **256**, and Subject List Window **258**, as shown.

Subject List Window **258** displays a listing of two or more possible in-focus "tagged subjects" from the current multi-subject data-set **205**. By default, the first two "tagged subjects" located by the system are listed as "Subject_A" and "Subject_B." The user is able to select which "tagged subject" will be placed in focus by touch screen selection of a subject listed within Subject List Window **258** (at least embodying herein at least one locatable-subject selector structured and arranged to enable user selecting of at least one such data entry of such at least one multi-subject data set).

By default, the first beacon to be activated and detected by the system is designated "Subject_A" and will be in focus. The "in-focus" subject will be identified in touch display screen **188** as the current "in-focus" subject by a green backlight.

The user can then select the next subject to be placed in focus, for example, by touching the menu item in Subject List Window **258** associated with "Subject_B". In an embodiment of the present system, program **194** does not immediately transition focus to "Subject_B" on the user's selection; rather, the system assigns "Subject_B" an "on deck" status. This "on deck" designation indicates that that a subject is selected and is ready to be the next subject the system will place "in-focus". An "on deck" subject is identified by a red backlight within subject List Window **258**.

After the user has selected a subject to be "on deck" and touch display screen **188** has indicated the status of the "on deck" subject by a red backlight, the user can then activate a transition between the current "in-focus" subject and the "on deck" subject by touching the "Rack focus" menu item **252**. Program **194** then signals the system to transition the camera focus from "Subject_A" to "Subject_B", using the current subject location profile for "Subject_B" (at least embodying herein at least one subject-focus transitioner structured and arranged to transition such focus state of such at least one image-capture device between such at least one first focus-setting profile generated for such at least one first locatable subject and such at least one other focus-setting profile generated for such at least one other locatable subject). The rate of transition is controlled by either the "Rack Focus Speed Setting" menu item **256** or the Digital focus speed slider **254**. Both menu items control the rate at which the program switches between focus of two "tagged subjects". "Rack Focus Speed Setting" menu item **256** allows the generalized selections of "slow", medium", and "fast" transitions. Digital focus speed slider **254** is configured to allow manual control of the speed of the rack focus process (at least embodying herein wherein such at least one subject-focus transitioner comprises at least one user transition control structured and arrange to enable user control of a rate of change of such transition of such focus state).

In an embodiment of the present system, the ability to switch between "Subject_A" and "Subject_B" is also available by remote finger triggers **176** incorporated within handles **178** (see FIG. **1**).

In addition, a low battery icon is provided in the Subject List Window **258** and will blink if a locator tag **116** is low on battery power. "Subject_E" is shown with a low battery icon illuminated.

User selection of "Options" menu item **208** within the primary menu **196** results in the display of "Options" menu **260** touch display screen **188**, as shown in FIG. **15**. FIG. **15** shows a front view, illustrating the portable user interface **180** displaying "Options" menu **260**, according to another embodiment of the disclosed subject matter.

Menu items within "Options" menu **260** enable the user to alter options within the menus. For example, options include selection of the displayed language, allowing the user to set the brightness of the display, allowing the user to choose a night time display color setting, allowing the user to prevent the editing of beacon names, etc.

In addition, menu item **262** within "Options" menu **260** allows the user to remove the "Rack focus" menu item **252** from Subject focus switching menu **250**. This results in the immediate transitioning of focus to a new subject as soon as the subject is selected within Subject List Window **258** (see also FIG. **14**). Menu item **264** within "Options" menu **260** results in the last subject to be focused on to automatically keep the last subject in focus to be automatically "on deck."

Other menu items within "Options" menu **260** include the ability to alter the organization of touch display screen **188** for left-handed users, monitor and modify feed options to define how the monitor feed from camera **103** is displayed, and select the language used in the interface. Upon reading this

specification, those with ordinary skill in the art will appreciate that, under appropriate circumstances, considering such issues as design preference, user preferences, marketing preferences, cost, technological advances, etc., other options such as, for example, changing measurement between imperial and metric units, having the ability to store and retrieve setting for specific users, etc., may suffice.

FIG. **16** shows a diagram, schematically illustrating master controller **300** configured to control a plurality of cameras **103** from a central location, according to an embodiment of the disclosed subject matter. Master controller **300** is configured provide wireless control of two or more cameras **103** equipped with servo-operated focus assist devices **160**. Master controller **300** (at least embodying herein at least one system controller structured and arranged to control multiple image-capture devices operating within such system) allows a single user to gain control of multiple cameras in a manner similar to the selecting of subjects in the above-described menus **196** of portable user interface **180**. More specifically, master controller **300** comprises a touch display screen **188** and menu **302** listing selectable cameras **103** under the control of the device. Once selected, a camera is then "on-deck" and the selected camera name is backlit by a green color. The user can then switch to the selected camera by pressing a "Control now" menu item **304**. When a camera is under control of the user, it is backlit by red. Multiple cameras **103** can also be controlled at the same time, allowing multiple cameras **103** to focus on the same subject all at once. This allows for one user to be able to conduct focusing for several cameras **103**. Once a camera is selected, the system program may display control menus similar to those implemented in the above-described portable user interface **180**.

It is noted that the disclosed embodiments of portable user interface **180** and master controller **300** are implemented using a portable computing device, such as, for example an iPad® tablet produced by the Apple Corporation of North America. In an embodiment, processor **126**, memory **127**, and user interface **124** are components of the tablet device and interoperate with one or more applications programs **194** executed within the tablet device.

In reference to the teachings contained herein, camera focusing system **100** comprises a method relating to generating, for at least one camera **103**, focus-setting data associated with one or more locatable subjects **113** to be captured, such focus-setting data usable to control the focus state of camera **113**. In that regard the method of camera focusing system **100** includes the steps of providing at least one locator tag **116** structured and arranged to generate first location data associated with a current location of a tagged subject associated with such locator tag **116**; providing at least one camera locator **120** structured and arranged to generate second location data associated with a current location of camera **103**; providing at least one computing device (i.e., distance computation unit **112**, or distance computation unit **161**, or portable user interface **180**, or master controller **300**), such computing device structured and arranged to calculate a current distance between locatable subjects **113** and an imager focus point **122** of camera **103**; generating such current distance using such first location data and such second location data; providing at least one distance display **114** configured to display the calculated current distance; and providing at least one follow-focus device (i.e., focus assist device **102** or servo-operated focus assist device **160**) structured and arranged to manipulate at least one focus ring of camera lens **105** to assist in establishing, within camera **103**, a focus state appropriate to the imaging of the subjects to be captured. In addition, the above method further comprises manipulating such focus ring of camera lens **105** in response to the calculated current distance displayed; wherein such locator tag comprises at least one first wireless communicator structured and arranged to wirelessly communicate such first location data.

Although applicant has described applicant's embodiments of the disclosed subject matter, it will be understood that the broadest scope of this subject matter includes modifications such as diverse shapes, sizes, and materials.

What is claimed is:

1. A system relating to generating, for at least one image-capture device, focus-setting data associated with one or more subjects to be captured, the focus-setting data usable to control the focus state of the at least one image-capture device, the system comprising:

a. at least one first location-data generator structured and arranged to generate first location data associated with a current location of at least one first locatable subject;

b. at least one second location-data generator structured and arranged to generate second location data associated with a current location of the at least one image-capture device; and

c. at least one distance calculator structured and arranged to calculate a current distance between the first locatable subject and an imager focus point of the at least one image-capture device, wherein the at least one distance calculator is configured to generate the current distance using the first location data and the second location data;

d. wherein the at least one first location data generator comprises at least one first wireless communicator structured and arranged to wirelessly communicate the first location data;

e. wherein the at least one distance calculator comprises:

i. at least one second wireless communicator structured and arranged to acquire the first location data by wirelessly communicating with the at least one first wireless communicator;

ii. at least one distance-data communicator structured and arranged to communicate the calculated distance to at least one image-focus effector controlling the focus state of the at least one image-capture device;

iii. a storage memory structured and arranged to store a plurality of calibration records, each the calibration record comprising data entries associated with at least one hardware configuration of the at least one image-capture device;

iv. at least one calibration user interface structured and arranged to assist user retrieval of a selected one of the plurality of saved calibration records;

v. wherein each one of the calibration records contains at least one data entry selected from the group consisting essentially of:

A. lens F-stop range;

B. lens focal-length range; and

C. lens focus adjustment range; and

vi. wherein the calibration records are usable by the at least one image-focus effector to control the focus state of the at least one image-capture device;

f. wherein the at least one first location data generator comprises at least one first motion coupler configured to physically couple the movements of the at least one first location data generator and the at least one first locatable subject; and

g. wherein the at least one second location data generator comprises at least one second motion coupler configured to physically couple the movements of the at least one second location data generator and the at least one image-capture device.

2. The system according to claim 1 wherein the at least one distance data communicator comprises at least one distance-data display configured to display the calculated current distance.

3. The system according to claim 2 further comprising at least one distance-display supporter structured and arranged to support the at least one distance data display adjacent the at least one image-capture device.

4. The system according to claim 3 further comprising at least one follow-focus device structured and arranged to manipulate at least one focus ring of the at least one image-capture device to assist in establishing, within the at least one image-capture device, a focus state appropriate to the imaging of the subjects to be captured.

5. The system according to claim 1 wherein:

a. the at least one first location-data generator comprises at least one Radio-frequency Identification (RFID) tag structured and arranged to wirelessly transmit at least one first radio signal from which the first location data is derivable; and

b. the at least one second location-data generator comprises at least one RFID signal receiver structured and arranged to receive the at least one first radio signal.

6. The system according to claim 1 wherein:

a. the at least one first location-data generator comprises:

i. at least one first Global Positioning System (GPS) receiver structured and arranged to receive GPS signal data associated with the current location of the at least one first locatable subject;

ii. at least one first GPS signal-data processor structured and arranged to process the GPS signal data to form the first location data; and

iii. at least one first wireless transmitter structured and arranged to wirelessly transmit the first location data;

b. the at least one second location-data generator comprises at least one second GPS receiver structured and arranged to receive GPS signal data associated with the current location of the at least one image-capture device; and

c. the at least one distance calculator comprises at least one wireless data receiver structured and arranged to wirelessly receive the first location data.

7. The system according to claim 1 wherein the at least one distance calculator comprises at least one focus-setting acquisition component structured and arranged to acquire at least one current image-focus configuration of the at least one image-capture device, including a current lens F-stop setting and a current lens focal length.

8. The system according to claim 7 wherein the at least one distance calculator further comprises at least one focus-setting display structured and arranged to display the at least one current image-focus configuration of the at least one image-capture device.

9. The system according to claim 1 wherein:

a. the at least one distance calculator further comprises at least one subject-profile generator structured and arranged to generate at least one first focus-setting profile for the at least one first subject;

b. wherein the at least one subject-profile generator generates the at least one first focus-setting profile using the first location data, the second location data, and the at least one current image-focus configuration; and

c. wherein the generated at least one first focus-setting profile is usable by the at least one image-focus effector to control the focus state of the at least one image-capture device.

10. The system according to claim 9, wherein:

a. the at least one image-focus effector comprises at least one servomotor-operated follow-focus device structured and arranged to automatically manipulate a focus ring of the at least one image-capture device; and

b. the at least one image-focus effector is configured to assist in establishing, within the at least one image-capture device, a focus state appropriate to the imaging of the subjects to be captured in response to the generated at least one first focus-setting profile.

11. The system according to claim 10 wherein the at least one servomotor-operated follow-focus device further comprises:

a. at least one manually-operated focus control configured to enable manual adjustments of the focus state;

b. at least one manual manipulation detector structured and arranged to detect manual-adjustment inputs; and

c. at least one servomotor override to override the automatic operation of the at least one servomotor-operated follow-focus device on detection of at least one manual manipulation of the at least one manually-operated focus control.

12. The system according to claim 1 wherein the at least one distance calculator further comprises:

a. at least one multi-subject data-set, each data entry of the at least one multi-subject data set identifying one locatable subject of a set comprising multiple locatable subjects;

b. at least one subject-profile generator structured and arranged to generate at least one focus-setting profile for each of the data entry of the at least one multi-subject data set;

c. at least one locatable-subject selector structured and arranged to enable user selecting of at least one the data entry of the at least one multi-subject data set; and

d. wherein each selected the at least one focus-setting profile is usable by the at least one image-focus effector to control the focus state of the at least one image-capture device.

13. The system according to claim 12 wherein the at least one distance calculator further comprises at least one subject-focus transitioner structured and arranged to transition the focus state of the at least one image-capture device between the at least one first focus-setting profile generated for the at least one first locatable subject and at least one other focus-setting profile generated for the at least one other locatable subject.

14. The system according to claim 13 wherein the at least one distance calculator further comprises:

a. at least one computing device, comprising:

i. at least one user interface;

ii. at least one processor; and

iii. memory; and

b. at least one program, wherein the at least one program is stored in the memory and configured to be executed by the at least one processor, the at least one program comprising instructions for:

i. displaying at least one menu on the at least one user interface, the at least one menu comprising at least one user-selectable menu item; and

ii. receiving at least one user input corresponding to at least one of the at least one user-selectable menu items.

15. The system according to claim 14 wherein the at least one program further comprises instructions for the at least one distance calculator to automatically seek locatable subjects.

16. The system according to claim 14 wherein the at least one user interface further comprises:

a. at least one current image window configured to display at least one current image captured by the at least one image-capture device;

b. at least one user-selectable menu item enabling the at least one calibration user interface; and

c. wherein the at least one user-selectable menu item enabling the at least one calibration user interface comprises at least one at least one user-selectable menu item enabling manual input of at least one hardware configuration of the at least one image-capture device.

17. The system according to claim 14 wherein the at least one user interface further comprises at least one user-selectable menu item enabling user-initiated acquisition of at least one of the first location data and the second location data.

18. The system according to claim 14 wherein the at least one user interface further comprises at least one user-selectable menu item enabling user associating of a locatable subject with at least one user-selected name.

19. The system according to claim 14 wherein the at least one user interface further comprises at least one user-selectable menu item enabling operation of the at least one subject-focus transitioner.

20. The system according to claim 1 further comprising at least one system controller structured and arranged to control multiple image-capture devices operating within the system.

21. The system according to claim 1 wherein the at least one image-capture device is a video camera.

22. The system according to claim 1, wherein:

a. the at least one first location-data generator comprises at least one ultra-wideband tag structured and arranged to wirelessly transmit at least one first radio signal from which the first location data is derivable; and

b. the at least one second location-data generator comprises at least one ultra-wideband receiver structured and arranged to receive the at least one first radio signal.

23. A system relating to generating, for at least one image-capture device, focus-setting data associated with one or more subjects to be captured, the focus-setting data usable to control the focus state of the at least one image-capture device, the system comprising:

a. at least one locator tag structured and arranged to generate first location data associated with a current location of a tagged subject associated with the at least one locator tag;

b. at least one image-device locator structured and arranged to generate second location data associated with a current location of the at least one image-capture device;

c. at least one computing device structured and arranged to calculate a current distance between the locatable subject and an imager focus point of the at least one image-capture device, wherein the at least one computing device is configured to generate the current distance using the first location data and the second location data;

d. wherein the at least one computing device further comprises:

i. a storage memory structured and arranged to store a plurality of calibration records, each the calibration record comprising data entries associated with at least one hardware configuration of the at least one image-capture device;

ii. at least one calibration user interface structured and arranged to assist user retrieval of a selected one of the plurality of saved calibration records;

iii. wherein each one of the calibration records contains at least one data entry selected from the group consisting essentially of:

A. lens F-stop range;

B. lens focal-length range; and

C. lens focus adjustment range; and

iv. wherein the calibration records are usable by the at least one image-focus effector to control the focus state of the at least one image-capture device;

e. at least one distance-data display configured to display the calculated current distance;

f. at least one follow-focus device structured and arranged to manipulate at least one focus ring of the at least one image-capture device to assist in establishing, within the at least one image-capture device, a focus state appropriate to the imaging of the subjects to be captured;

g. wherein the at least one locator tag comprises at least one first wireless communicator structured and arranged to wirelessly communicate the first location data;

h. wherein the at least one computing device comprises at least one second wireless communicator structured and arranged to acquire the first location data by wirelessly communicating with the at least one first wireless communicator; and

i. wherein the at least one distance-data display comprises at least one display mount structured and arranged to assist mounting of the at least one distance-data display adjacent the at least one follow-focus device.

24. The system according to claim 23 further comprising:

a. at least one focus-setting acquisition component structured and arranged to acquire at least one current image-focus configuration of the at least one image-capture device; and

b. at least one focus-setting display structured and arranged to display the at least one current image-focus configuration of the at least one image-capture device.

25. The system according to claim 24 wherein the at least one computing device comprises at least one subject-profile generator structured and arranged to generate at least one focus-setting profile for each of the tagged subjects, wherein:

a. the at least one subject-profile generator generates the at least one focus-setting profile using the first location data, the second location data, and the at least one current image-focus configuration; and

b. each of the generated at least one focus-setting profile is usable to control the focus state of the at least one image-capture device.

26. The system according to claim 25 further comprising:

a. at least one servomotor-operated follow-focus device structured and arranged to automatically manipulate a focus ring of the at least one image-capture device;

b. wherein at least one servomotor-operated follow-focus device is controlled by the at least one computing device; and

c. wherein the at least one servomotor-operated follow-focus device is configured to assist in establishing, within the at least one image-capture device, a focus state appropriate to the imaging of the subjects to be captured.

27. The system according to claim 26 wherein the at least one computing device further comprises:

a. at least one user interface;

b. at least one processor;

c. memory; and

d. at least one program, wherein the at least one program is stored in the memory and configured to be executed by the at least one processor, the at least one program comprising instructions for:

i. displaying at least one menu on the at least one user interface, the at least one menu comprising at least one user-selectable menu item; and

ii. receiving at least one user input corresponding to at least one of the at least one user-selectable menu items.

28. The system according to claim **27** wherein the at least one computing device communicates with the at least one servomotor-operated follow-focus device wirelessly.

29. A method relating to generating, for at least one image-capture device, focus-setting data associated with one or more subjects to be captured, the focus-setting data usable to control the focus state of the at least one image-capture device, the method comprising the steps of:

a. providing at least one locator tag structured and arranged to generate first location data associated with a current location of a tagged subject associated with the at least one locator tag;

b. providing at least one image-device locator structured and arranged to generate second location data associated with a current location of the at least one image-capture device;

c. providing at least one computing device structured and arranged to calculate a current distance between the locatable subject and an imager focus point of the at least one image-capture device;

d. generating the current distance using the first location data and the second location data;

e. providing at least one distance-data display configured to display the calculated current distance;

f. providing at least one follow-focus device structured and arranged to manipulate at least one focus ring of the at least one image-capture device to assist in establishing, within the at least one image-capture device, a focus state appropriate to the imaging of the subjects to be captured;

g. manipulating the at least one focus ring of the at least one image-capture in response to the calculated current distance displayed;

h. wherein the at least one locator tag comprises at least one first wireless communicator structured and arranged to wirelessly communicate the first location data;

i. wherein the at least one computing device further comprises:

i. at least one second wireless communicator structured and arranged to acquire the first location data by wirelessly communicating with the at least one first wireless communicator;

ii. a storage memory structured and arranged to store a plurality of calibration records, each the calibration record comprising data entries associated with at least one hardware configuration of the at least one image-capture device;

iii. at least one calibration user interface structured and arranged to assist user retrieval of a selected one of the plurality of saved calibration records;

iv. wherein each one of the calibration records contains at least one data entry selected from the group consisting essentially of:

A. lens F-stop range;

B. lens focal-length range; and

C. lens focus adjustment range; and

v. wherein the calibration records are usable by the at least one follow focus device to control the focus state of the at least one image-capture device; and

j. wherein the at least one distance-data display comprises at least one display mount structured and arranged to assist mounting of the at least one distance-data display adjacent the at least one follow-focus device.

* * * * *